ARCHITECTURAL DRAWINGS		

01	Site plan	086-EN/15-G001
	TIPPING AREA, WASTE BUNKER AND BOILER HALL	
02	Level +4.00, -6.00, ±0.00	086-EN/15-G010
03	Level +4.00, -6.00, +8.30	086-EN/15-G011
04	Level +14.85, +20.90	086-EN/15-G012
05	Level +14.85, +36.40, +55.49	086-EN/15-G013
06	Section 1-1	086-EN/15-G014
07	Section 2-2	086-EN/15-G015
08	Section 3-3	086-EN/15-G016
09	Elevation A	086-EN/15-G017
10	Elevation B	086-EN/15-G018
11	Elevation C	086-EN/15-G019
12	Elevation D	086-EN/15-G020
	ADMINISTRATION BUILDING	
13	Ground floor plan	086-EN/15-G021
14	Level +4.50	086-EN/15-G022
15	Level +8.30	086-EN/15-G023
16	Level +12.00	086-EN/15-G024
17	Section 1-1	086-EN/15-G025
18	Elevation A	086-EN/15-G026
19	Elevation B	086-EN/15-G027
	TURBIN HALL AND COMPRESSED AIR BUILDING	
20	Ground floor plan	086-EN/15-G028
21	Level +4.50	086-EN/15-G029
22	Level +9.00	086-EN/15-G030
23	Roof plan	086-EN/15-G031
24	Section 1-1 and 2-2	086-EN/15-G032
25	Elevation A and B	086-EN/15-G033
26	Elevation C and D	086-EN/15-G034
	ELECTRICAL BUILDING	
27	Foundation plan	086-EN/15-G035
28	Ground floor plan	086-EN/15-G036
29	Level +7.30	086-EN/15-G037
30	Roof plan	086-EN/15-G038
31	Section 1-1	086-EN/15-G039
32	Section 2-2	086-EN/15-G040
33	Elevation A	086-EN/15-G041

34	Elevation B	086-EN/15-G042
35	Elevation C	086-EN/15-G043
	WATER TREATMENT BUILDING	
36	Foundation plan	086-EN/15-G044
37	Ground floor plan	086-EN/15-G045
38	Roof plan	086-EN/15-G046
39	Section 1-1	086-EN/15-G047
40	Section 2-2	086-EN/15-G048
41	Elevation A	086-EN/15-G049
42	Elevation B	086-EN/15-G050
43	Elevation C	086-EN/15-G051
	WORKSHOP BUILDING	
44	Ground floor plan	086-EN/15-G052
45	Level +6.80	086-EN/15-G053
46	Roof plan	086-EN/15-G054
47	Section 1-1	086-EN/15-G055
48	Section 2-2	086-EN/15-G056
49	Elevation A	086-EN/15-G057
50	Elevation B	086-EN/15-G058
51	Elevation C	086-EN/15-G059
52	Elevation D	086-EN/15-G060
	SNCR DENOX BUILDING	
53	Foundation plan, Ground floor plan, Roof plan	086-EN/15-G061
54	Section 1-1 and 2-2	086-EN/15-G062
55	Elevation A and B	086-EN/15-G063
56	Elevation C and D	086-EN/15-G064
	FIRE WATER PUMP HOUSE	
57	Ground floor plan, Section 1-1, Elevation A, B and C	086-EN/15-G065
	CONTROL&GIS BUILDING	
		086-EN/15-G066
58	Ground floor plan, Section 1-1	086-EN/15-G067
59	Elevation A, B, C and D	
	METERING&AUXILIARY ROOM	
60	Foundation plan, Ground floor , Section 1-1 and 2-2, Elevation A	086-EN/15-G068

	ELECTRICAL BUILDING	
61	Ground floor , Section 1-1 , Elevation A and B	086-EN/15-G069
WATER AND SEWAGE		
01	Site plan – Water and Sewage	086-EN/15-G070
LIGHTING		
01	Outdoor lighting layout	086-EN/15-E001

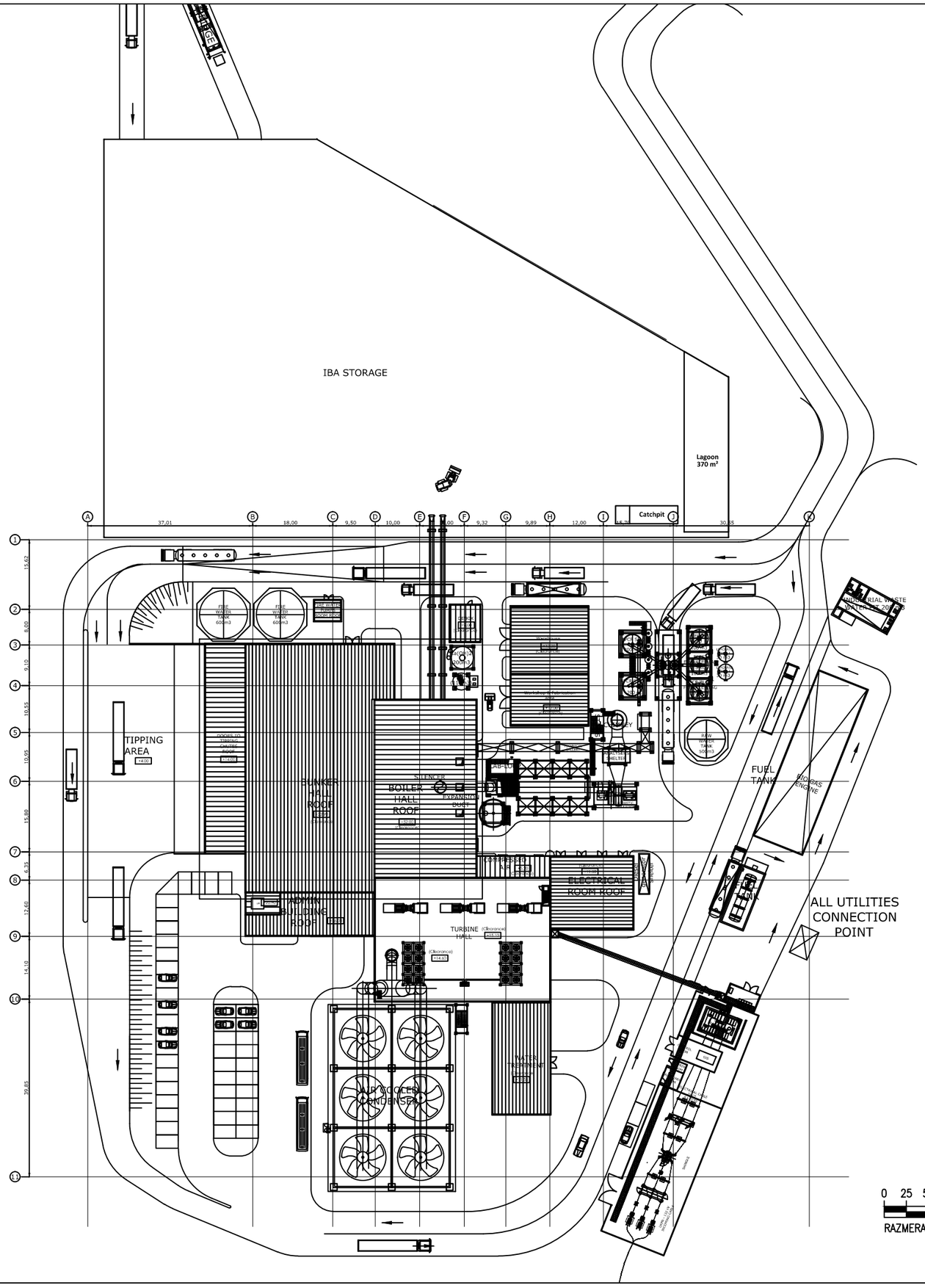

0 25 50 75 100 200 250m

RAZMERA 1:2500

CNIM

ENERGOPROJEKT ENTEL a.d.

REV.						

INVESTITOR: CNIM			OBJECT: BELGRADE EFW PLANT
DRAWN	D.D.J.	PROPOSAL: 086-EH/15-R2	PROJECT:
			SIST./OBJ.:
CHKD		PHASE:	
APPD			TITLE: SITE PLAN
APPD		DATE: 07.2017.	
SCALE: 1:500			DWG. NUMBER: G001
			LIST 01 OD 01 REV. 0

FORMAT A3 297x420=0,125m²

B 18000 A 017 C 9500 D 10000 E 10000 F — 57655

3 4 5 6 7 8

9100 10550 10950 15800 6350 — 47250

GRAB LOWERING AREA WASTE BACKLOADING

PRIMARY AIR FAN

TIPPING AREA

+4.00

WASTE BUNKER

−6.00

±0.00

BOILER

BOILER HALL

±0.00

B 018

1 014

3 016

C 019

2 015

D 020

1

2

3

REV.	DESCRIPTION	DATE	DESIGNED BY	CHECKED BY	APPROVED BY	APPROVED BY

DESIGNED BY	D.Đ.
DRAWN BY	A.F.
CHECHED BY	
APPROVED BY	
APPROVED BY	

OFFER N°: 086-EN/15-R2

DATE: 06.2017.

SCALE: 1:100

N°:

EMP./PROJECT.:

CNIM/ BELGRADE EFW PLANT

CNIM

ENERGOPROJEKT ENTEL a.d.

DWG.SUBJECT:

TIPPING AREA, WASTE BUNKER AND BOILER HALL LEVEL +4.00, -6.00, ±0.00

DWG N°: **086-EN/15-G010**

SHEET 01 OF 01 REV. 0

FILE NAME: 0A1401-0202-G010-020

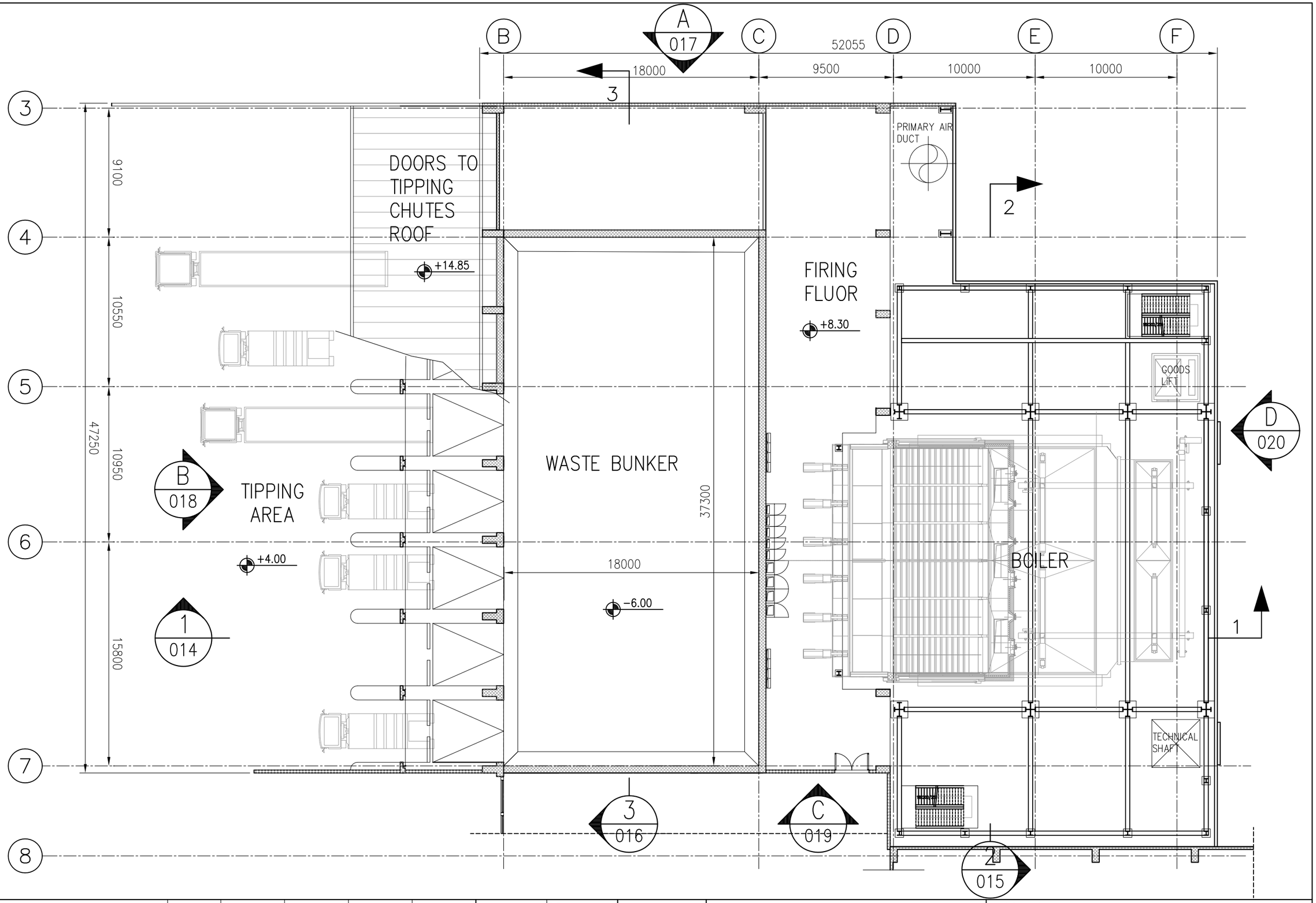

FORMAT A3 297x420=0,125m²

FILE NAME: 0A1401-0202-G010-020

REV.	DESCRIPTION	DATE	DESIGNED BY	CHECKED BY	APPROVED BY	APPROVED BY

DESIGNED BY	D.Đ.
DRAWN BY	A.F.
CHECHED BY	
APPROVED BY	
APPROVED BY	

OFFER N°: 086-EN/15-R2

DATE: 06.2017.

SCALE: 1:100

N°:

EMP./PROJECT.:

CNIM/
BELGRADE EFW PLANT

CNIM

ENERGOPROJEKT ENTEL a.d.

DWG,SUBJECT:

TIPPING AREA, WASTE BUNKER AND BOILER HALL
LEVEL +4.00, -6.00, +8.30

DWG N°: **086-EN/15-G011**

SHEET 01 OF 01 REV. 0

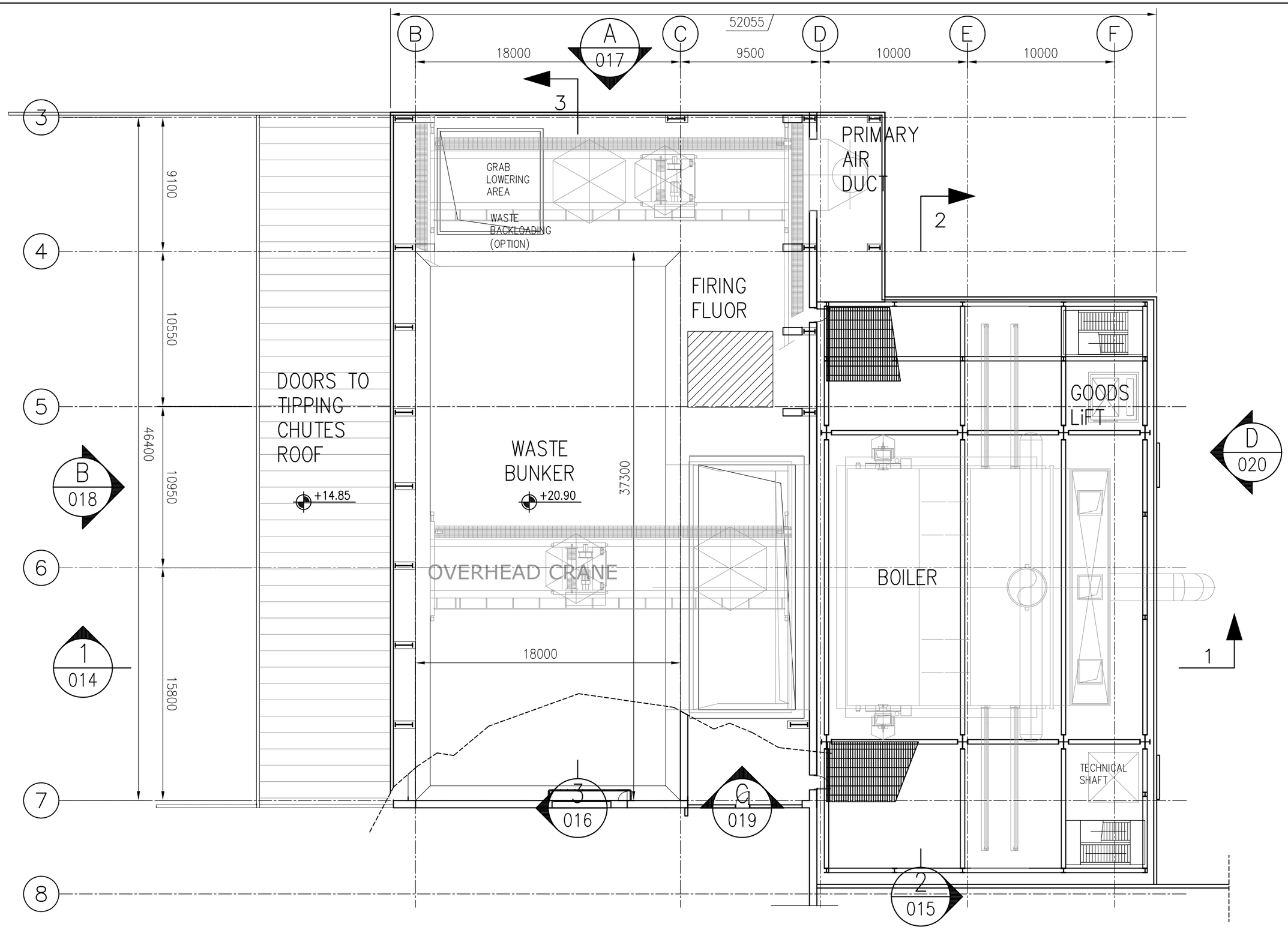

FORMAT A3 297x420=0,125m²

FILE NAME: 0A1401-0202-G010-020

REV.	DESCRIPTION	DATE	DESIGNED BY	CHECKED BY	APPROVED BY	APPROVED BY

DESIGNED BY	D.Đ.
DRAWN BY	A.F.
CHECHED BY	
APPROVED BY	
APPROVED BY	

OFFER N°: 086-EN/15-R2

DATE: 06.2017.

SCALE: 1:100

N°:

EMP./PROJECT.:

CNIM/
BELGRADE EFW PLANT

CNIM

ENERGOPROJEKT ENTEL a.d.

DWG.SUBJECT:

TIPPING AREA, WASTE BUNKER AND BOILER HALL
LEVEL +14.85, +20.90

DWG N°: **086-EN/15-G012**

SHEET 01 OF 01 REV. 0

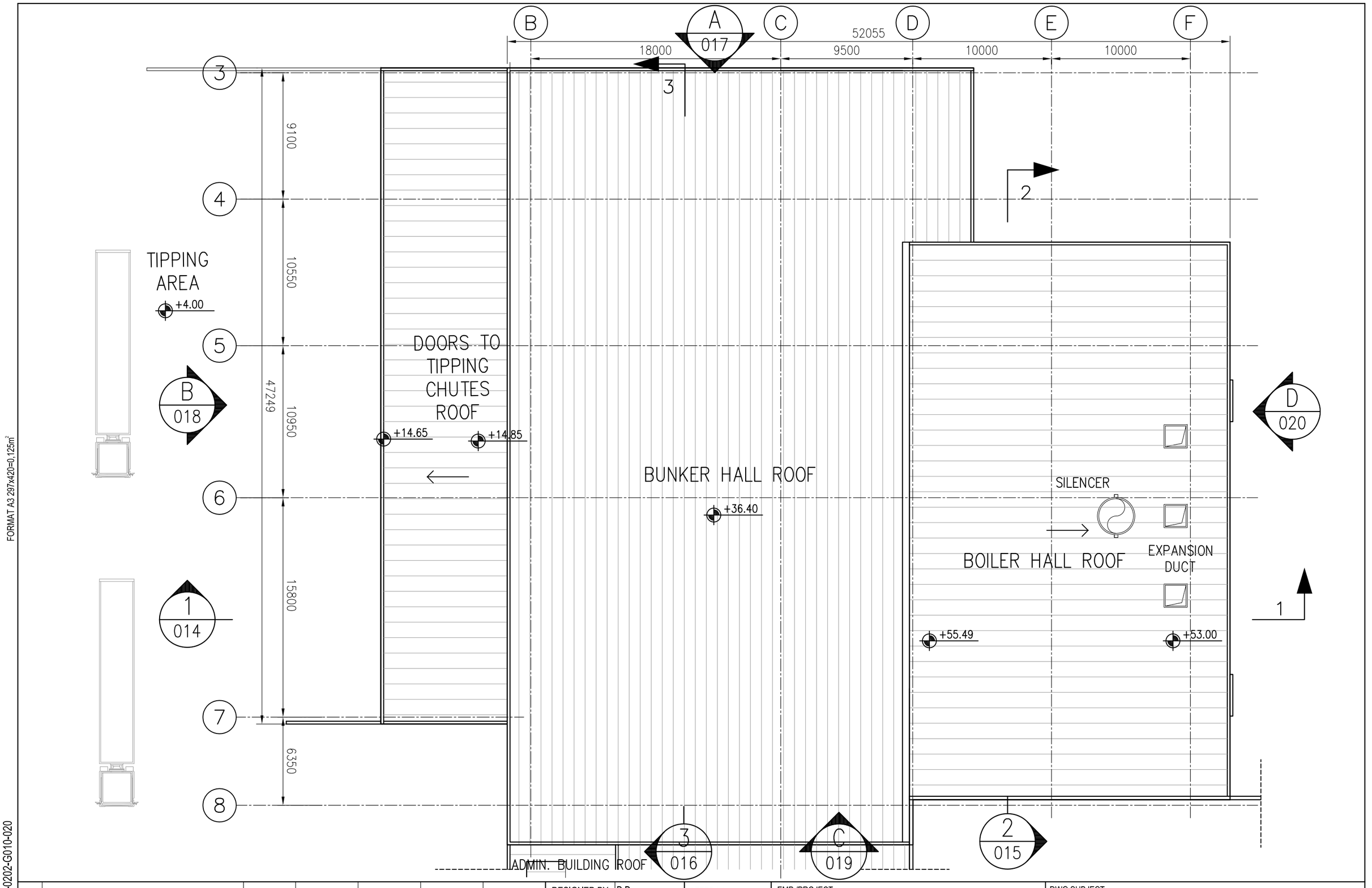

FORMAT A3 297x420=0,125m²

FILE NAME: 0A1401-0202-G010-020

REV.	DESCRIPTION	DATE	DESIGNED BY	CHECKED BY	APPROVED BY	APPROVED BY

DESIGNED BY	D.Đ.	OFFER N°:	086-EN/15-R2
DRAWN BY	A.F.		
CHECHED BY		DATE:	06.2017.
APPROVED BY		SCALE:	1:100
APPROVED BY		N°:	

EMP./PROJECT.: CNIM/ BELGRADE EFW PLANT

CNIM

ENERGOPROJEKT ENTEL a.d.

DWG.SUBJECT: TIPPING AREA, WASTE BUNKER AND BOILER HALL LEVEL +14.85, +36.40, +55.49

DWG N°: 086-EN/15-G013

SHEET 01 OF 01 REV. 0

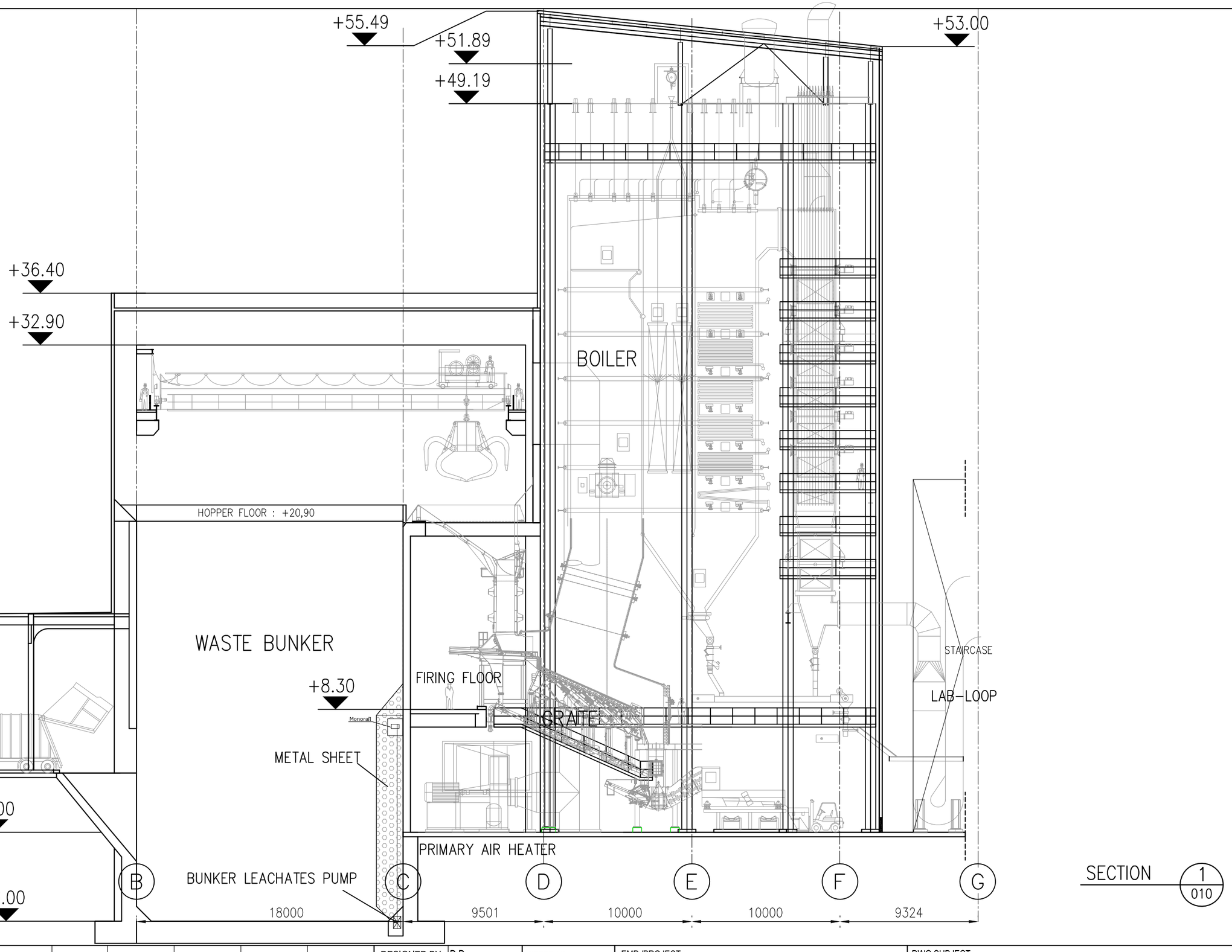

SECTION 1 / 010

FORMAT A3 297x420=0,125m²

FILE NAME: 0A1401-0202-G010-020

REV.	DESCRIPTION	DATE	DESIGNED BY	CHECKED BY	APPROVED BY	APPROVED BY

DESIGNED BY	D.Đ.
DRAWN BY	A.F.
CHECHED BY	
APPROVED BY	
APPROVED BY	

OFFER N°: 086-EN/15-R2
DATE: 06.2017.
SCALE: 1:100
N°:

EMP./PROJECT.:
CNIM/
BELGRADE EFW PLANT

ENERGOPROJEKT ENTEL a.d.

DWG.SUBJECT:
TIPPING AREA, WASTE BUNKER AND BOILER HALL SECTION 1-1

DWG N°: **086-EN/15-G014**

SHEET 01 OF 01 REV. 0

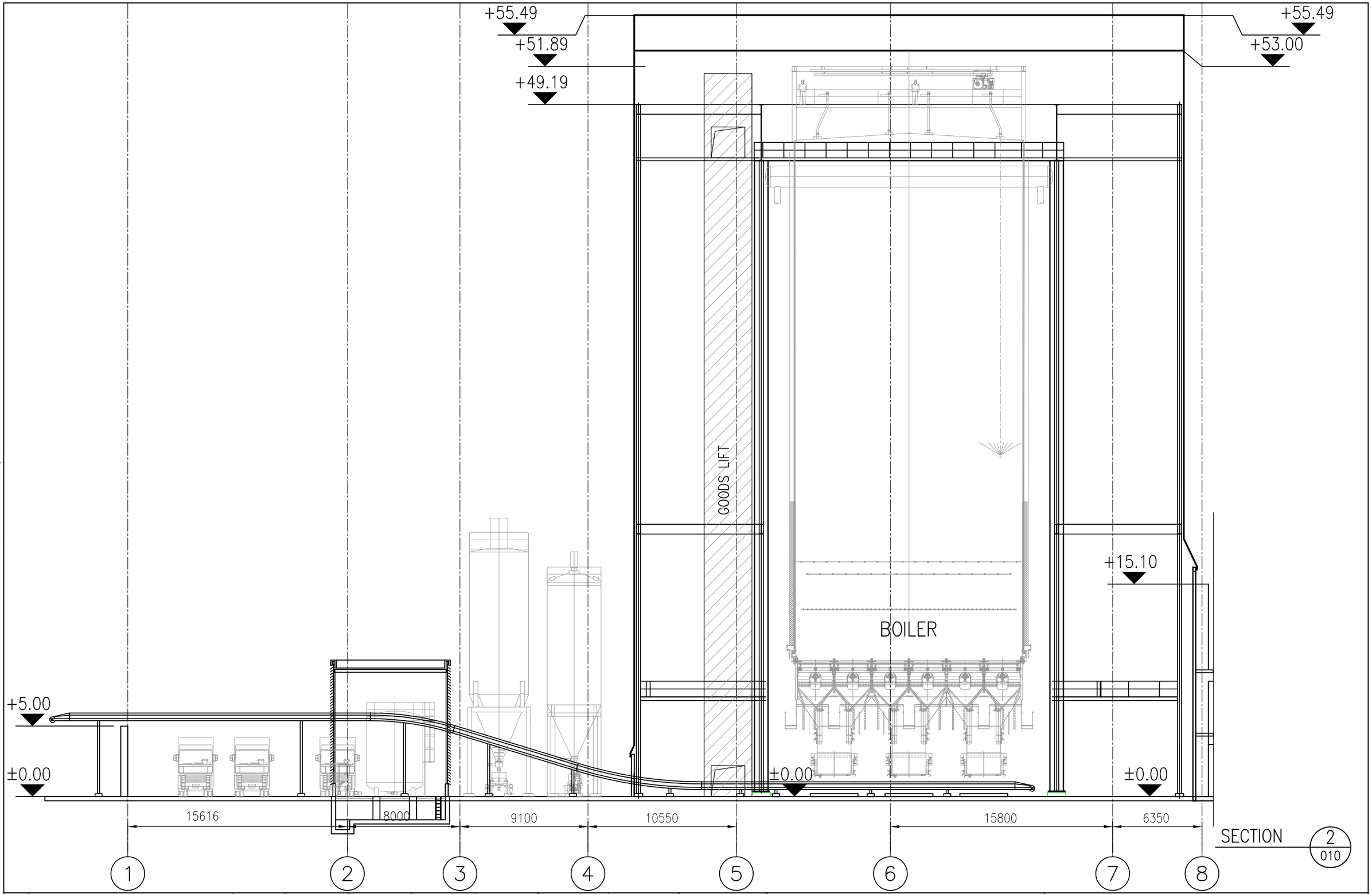

FORMAT A3 297x420=0,125m²

FILE NAME: 0A1401-0202-G010-020

REV.	DESCRIPTION	DATE	DESIGNED BY	CHECKED BY	APPROVED BY	APPROVED BY

DESIGNED BY	D.Đ.
DRAWN BY	A.F.
CHECHED BY	
APPROVED BY	
APPROVED BY	

OFFER N°: 086-EN/15-R2

DATE: 06.2017.

SCALE: 1:100

N°:

EMP./PROJECT.:

CNIM/
BELGRADE EFW PLANT

CNIM

ENERGOPROJEKT ENTEL a.d.

DWG.SUBJECT:

TIPPING AREA, WASTE BUNKER AND BOILER HALL
SECTION 2-2

DWG N°: **086-EN/15-G015**

SHEET 01 OF 01 REV. 0

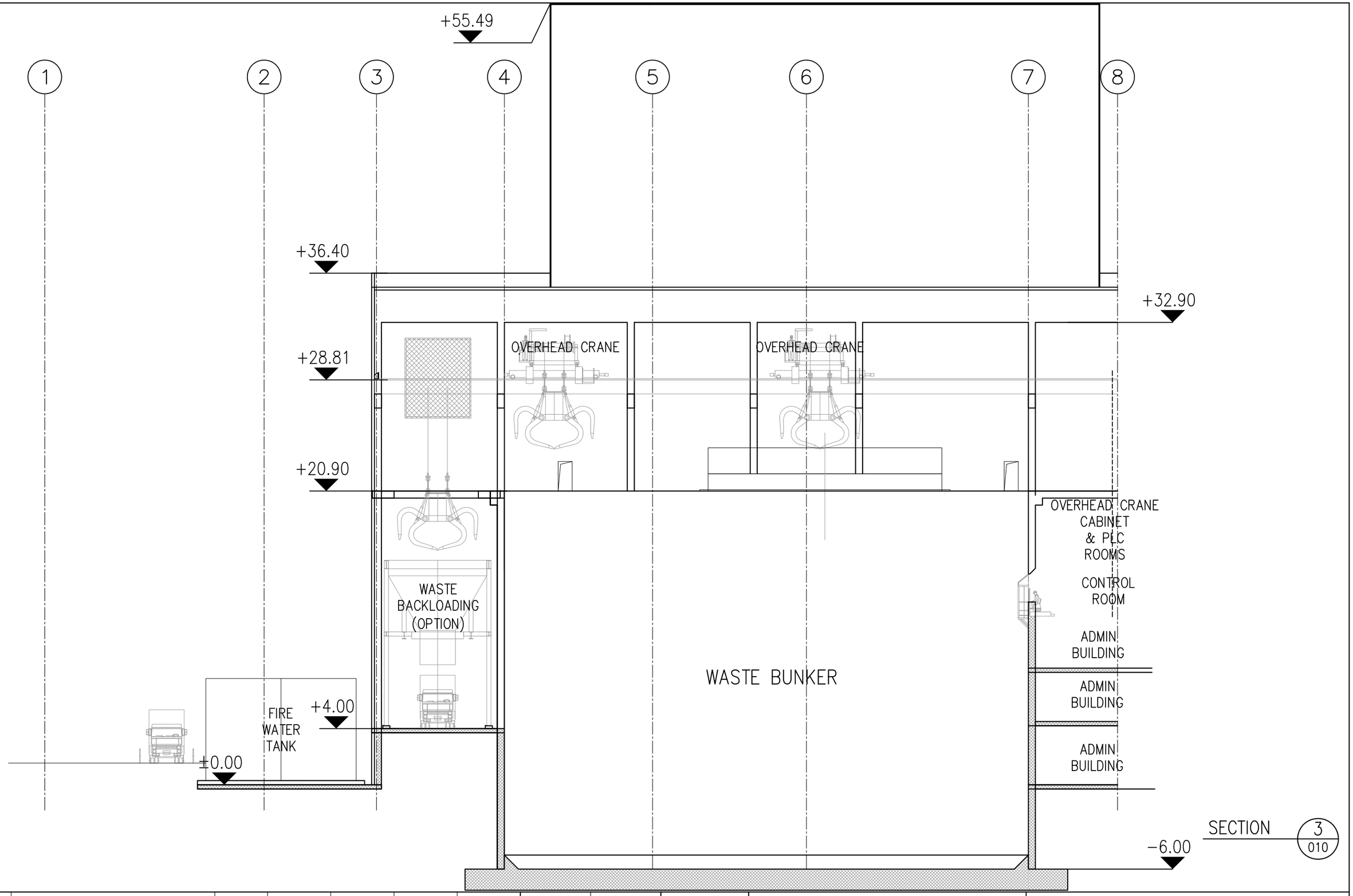

FORMAT A3 297x420=0,125m²

FILE NAME: 0A1401-0202-G010-020

REV.	DESCRIPTION	DATE	DESIGNED BY	CHECKED BY	APPROVED BY	APPROVED BY

DESIGNED BY	D.Đ.
DRAWN BY	A.F.
CHECHED BY	
APPROVED BY	
APPROVED BY	

OFFER N°: 086-EN/15-R2

DATE: 06.2017.

SCALE: 1:100

N°:

EMP./PROJECT.: CNIM/ BELGRADE EFW PLANT

CNIM

ENERGOPROJEKT ENTEL a.d.

DWG.SUBJECT: TIPPING AREA, WASTE BUNKER AND BOILER HALL SECTION 3-3

DWG N°: 086-EN/15-G016

SHEET 01 OF 01 REV. 0

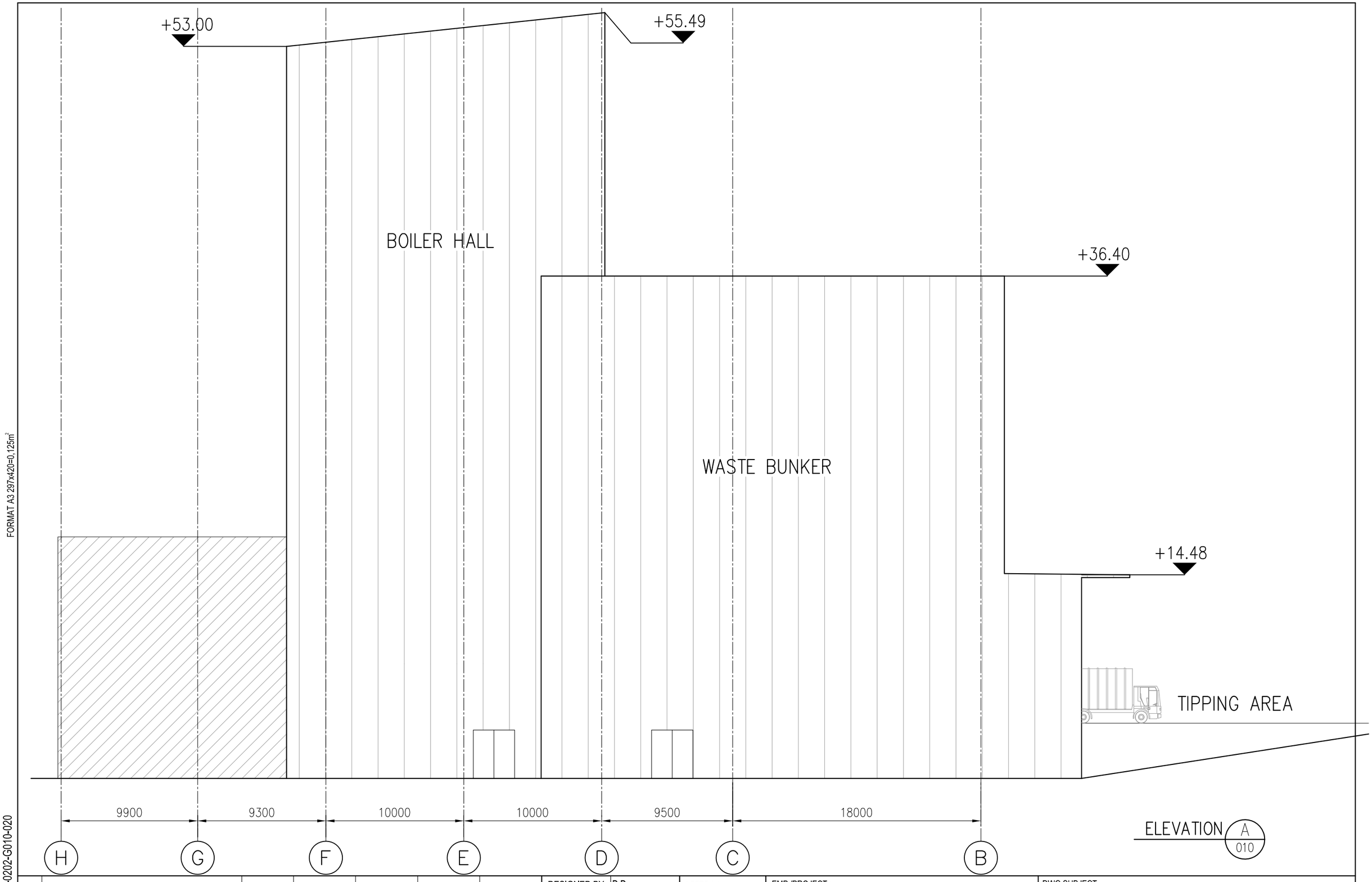

FORMAT A3 297x420=0,125m²

FILE NAME: 0A1401-0202-G010-020

REV.	DESCRIPTION	DATE	DESIGNED BY	CHECKED BY	APPROVED BY	APPROVED BY

DESIGNED BY	D.Đ.
DRAWN BY	A.F.
CHECHED BY	
APPROVED BY	
APPROVED BY	

OFFER N°: 086-EN/15-R2

DATE: 06.2017.

SCALE: 1:100

N°:

EMP./PROJECT.:

CNIM/
BELGRADE EFW PLANT

CNIM

ENERGOPROJEKT ENTEL a.d.

DWG.SUBJECT:

TIPPING AREA, WASTE BUNKER AND BOILER HALL
ELEVATION A

DWG N°: **086-EN/15-G017**

SHEET 01 OF 01 REV. 0

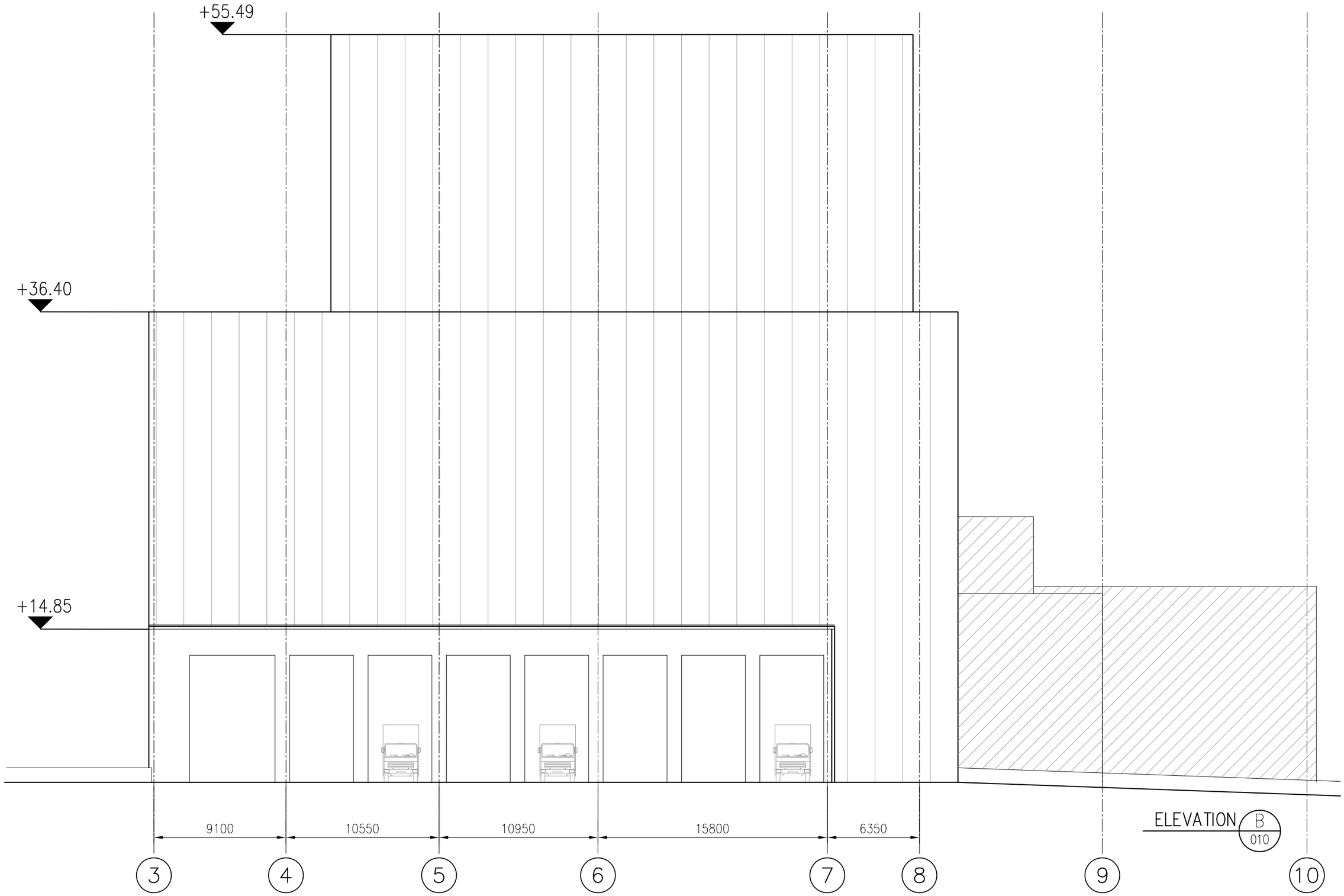

FORMAT A3 297x420=0,125m²

FILE NAME: 0A1401-0202-G010-020

REV.	DESCRIPTION	DATE	DESIGNED BY	CHECKED BY	APPROVED BY	APPROVED BY

DESIGNED BY	D.Đ.
DRAWN BY	A.F.
CHECHED BY	
APPROVED BY	
APPROVED BY	

OFFER N°: 086-EN/15-R2

DATE: 06.2017.

SCALE: 1:100

N°:

EMP./PROJECT.:

CNIM/ BELGRADE EFW PLANT

CNIM

ENERGOPROJEKT ENTEL a.d.

DWG.SUBJECT:

TIPPING AREA, WASTE BUNKER AND BOILER HALL ELEVATION B

DWG N°: **086-EN/15-G018**

SHEET 01 OF 01 REV. 0

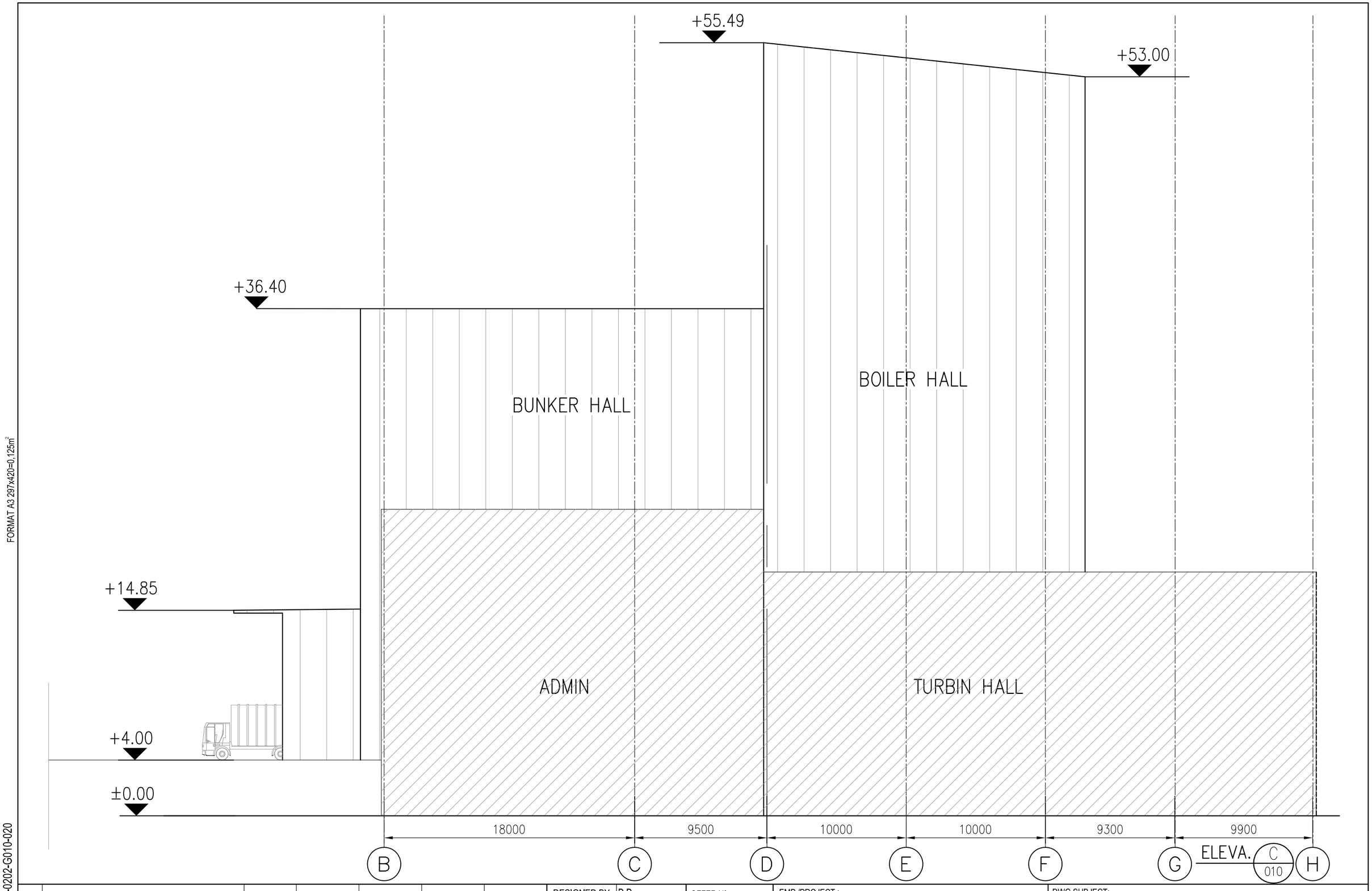

FORMAT A3 297x420=0,125m²

FILE NAME: 0A1401-0202-G010-020

REV.	DESCRIPTION	DATE	DESIGNED BY	CHECKED BY	APPROVED BY	APPROVED BY

DESIGNED BY	D.Đ.
DRAWN BY	A.F.
CHECHED BY	
APPROVED BY	
APPROVED BY	
N°:	

OFFER N°: 086-EN/15-R2

DATE: 06.2017.

SCALE: 1:100

EMP./PROJECT.:
CNIM/ BELGRADE EFW PLANT

CNIM

ENERGOPROJEKT ENTEL a.d.

DWG.SUBJECT:
TIPPING AREA, WASTE BUNKER AND BOILER HALL ELEVATION C

DWG N°: **086-EN/15-G019**

SHEET 01 OF 01 REV. 0

+55.49

+53.00

+36.40

+36.40

BOILER HALL

WASTE BUNKER

TURBIN HALL

±0.00

ELEVATION D 010

14100 | 12600 | 6350 | 15800 | 10950 | 10550 | 9100

10 | 9 | 8 | 7 | 6 | 5 | 4 | 3

FORMAT A3 297x420=0,125m²

FILE NAME: 0A1401-0202-G010-020

REV.	DESCRIPTION	DATE	DESIGNED BY	CHECKED BY	APPROVED BY	APPROVED BY

DESIGNED BY	D.Đ.
DRAWN BY	A.F.
CHECHED BY	
APPROVED BY	
APPROVED BY	

OFFER N°: 086-EN/15-R2

DATE: 06.2017.

SCALE: 1:100

N°:

EMP./PROJECT.:

CNIM/ BELGRADE EFW PLANT

CNIM

ENERGOPROJEKT ENTEL a.d.

DWG.SUBJECT:

TIPPING AREA, WASTE BUNKER AND BOILER HALL ELEVATION D

DWG N°: **086-EN/15-G020**

SHEET 01 OF 01 REV. 0

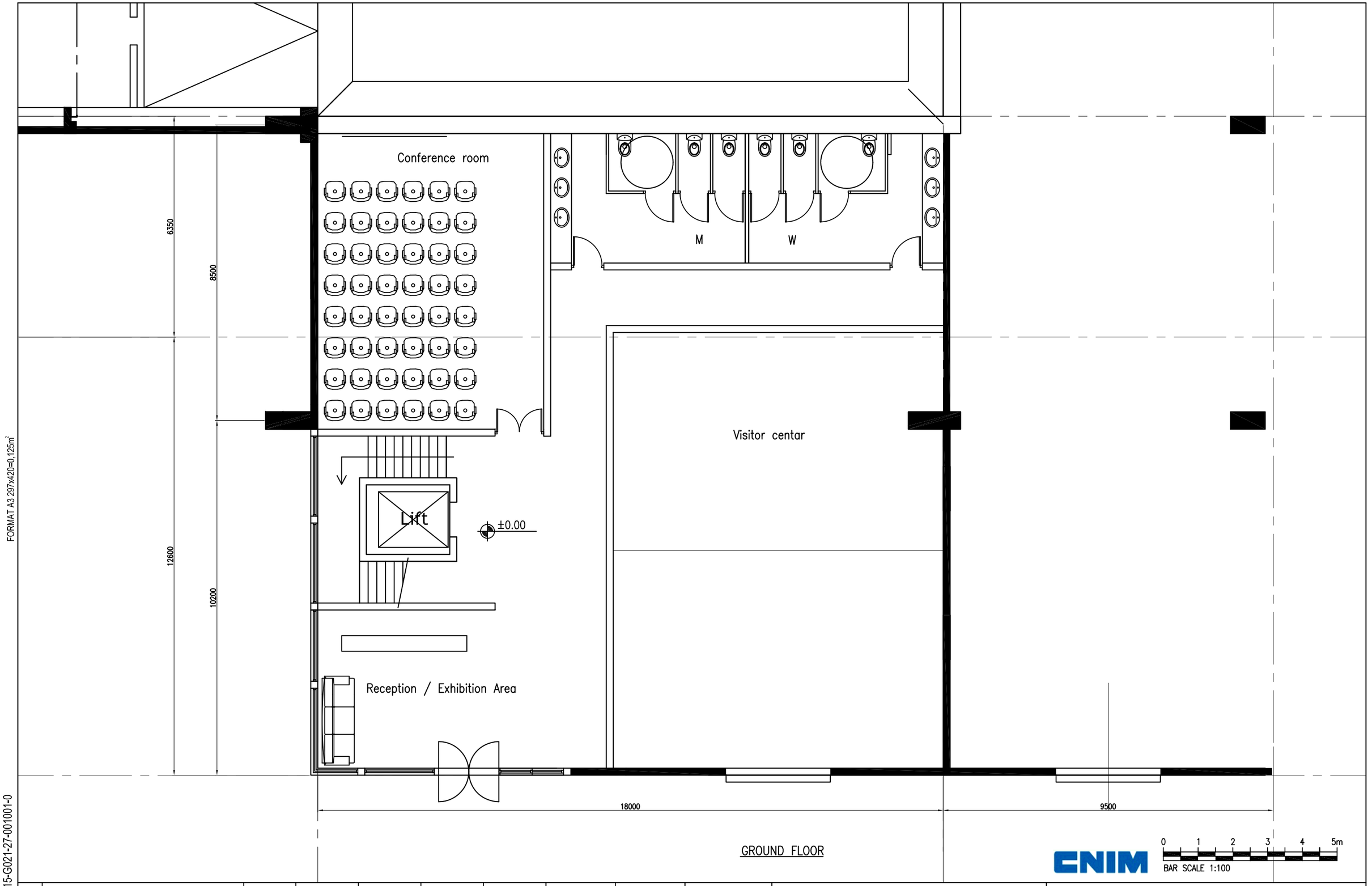

GROUND FLOOR

0 1 2 3 4 5m
BAR SCALE 1:100

FORMAT A3 297x420=0,125m²

FILE NAME: 086-EN-15-G021-27-001001-0

REV.	DESCRIPTION	DATE	DESIGNED BY	CHECKED BY	APPROVED BY	APPROVED BY

DESIGNED BY	D.Dj.
DRAWN BY	A.F.
CHECKED BY	
APPROVED BY	
APPROVED BY	

OFFER N°: 086-EN/15-R2
DATE: 06.2017.
SCL.: 1:100
N°:

EMP./PROJECT: **CNIM/ BELGRADE EFW PLANT**

ENERGOPROJEKT ENTEL a.d.

DWG.SUBJ.: **ADMINISTRATION BUILDING GROUND FLOOR**

DWG N°: **086-EN/15-G021**

SHEET OF REV.

FORMAT A3 297x420=0,125m²

Nije definisana prostorija

Showers

Female chang.

7p.

Male Chang.
15p.

IT
/photocopy

Store
/archives

Lift

Meeting room

+4.50

Supervisors
(mec / elec) (2p)

Technicians offices
(10p)

20p.
Mess

6350

8500

12600

10200

18000

9500

LEVEL +4.50m

0 1 2 3 4 5m
BAR SCALE 1:100

CNIM

FILE NAME: 086-EN-15-G021-27-001001-0

REV.	DESCRIPTION	DATE	DESIGNED BY	CHECKED BY	APPROVED BY	APPROVED BY

DESIGNED BY	D.Dj.
DRAWN BY	A.F.
CHECKED BY	
APPROVED BY	
APPROVED BY	

OFFER N°: 086-EN/15-R2
DATE: 06.2017.
SCL.: 1:100
N°:

EMP./PROJECT:
CNIM/
BELGRADE EFW PLANT

ENERGOPROJEKT
ENTEL a.d.

DWG.SUBJ.:
ADMINISTRATION BUILDING
LEVEL +4.50m

DWG N°: **086-EN/15-G022**

SHEET OF REV.

Accounting office

Accounting office

First Aid Room

Kitchen

IT /photocopy

Adm Off 5 (2p)

Training room

Landfill Staff office

Open plan office 1

First Aid Room

Reception

Lift

Conference Room

W

W

+8.30

Administration office

Assistent manager

Plant Director office

Deputy Director office

Assistant manager office

QSE manager office

18000

9500

LEVEL +8.30m

0 1 2 3 4 5m

BAR SCALE 1:100

FORMAT A3 297x420=0,125m²

FILE NAME: 086-EN-15-G021-27-001001-0

REV.	DESCRIPTION	DATE	DESIGNED BY	CHECKED BY	APPROVED BY	APPROVED BY

DESIGNED BY	D.Dj.
DRAWN BY	A.F.
CHECKED BY	
APPROVED BY	
APPROVED BY	

OFFER N°: 086-EN/15-R2

DATE: 06.2017.

SCL.: 1:100

N°:

EMP./PROJECT:

CNIM/

BELGRADE EFW PLANT

ENERGOPROJEKT ENTEL a.d.

DWG.SUBJ.:

ADMINISTRATION BUILDING

LEVEL +8.30m

DWG N°: **086-EN/15-G023**

SHEET OF REV.

FORMAT A3 297x420=0,125m²

CONTROL ROOM

M

W

Lift

+12.00

Conference Room

Operations Manager office

Operations deputy offic
+Process Engineer

Kitchen Messroom

18000

9500

Level +12.00m

0 1 2 3 4 5m

BAR SCALE 1:100

CNIM

							DESIGNED BY	D.Dj.	OFFER N°: 086-EN/15-R2	EMP./PROJECT: CNIM/ BELGRADE EFW PLANT	DWG.SUBJ.: ADMINISTRATION BUILDING LEVEL +12.00m
							DRAWN BY	A.F.			
							CHECKED BY		DATE: 06.2017.	ENERGOPROJEKT ENTEL a.d.	DWG N°: 086-EN/15-G024
							APPROVED BY		SCL.: 1:100		
REV.	DESCRIPTION	DATE	DESIGNED BY	CHECKED BY	APPROVED BY	APPROVED BY	APPROVED BY		N°:		SHEET OF REV.

FILE NAME: 086-EN-15-G021-27-001001-0

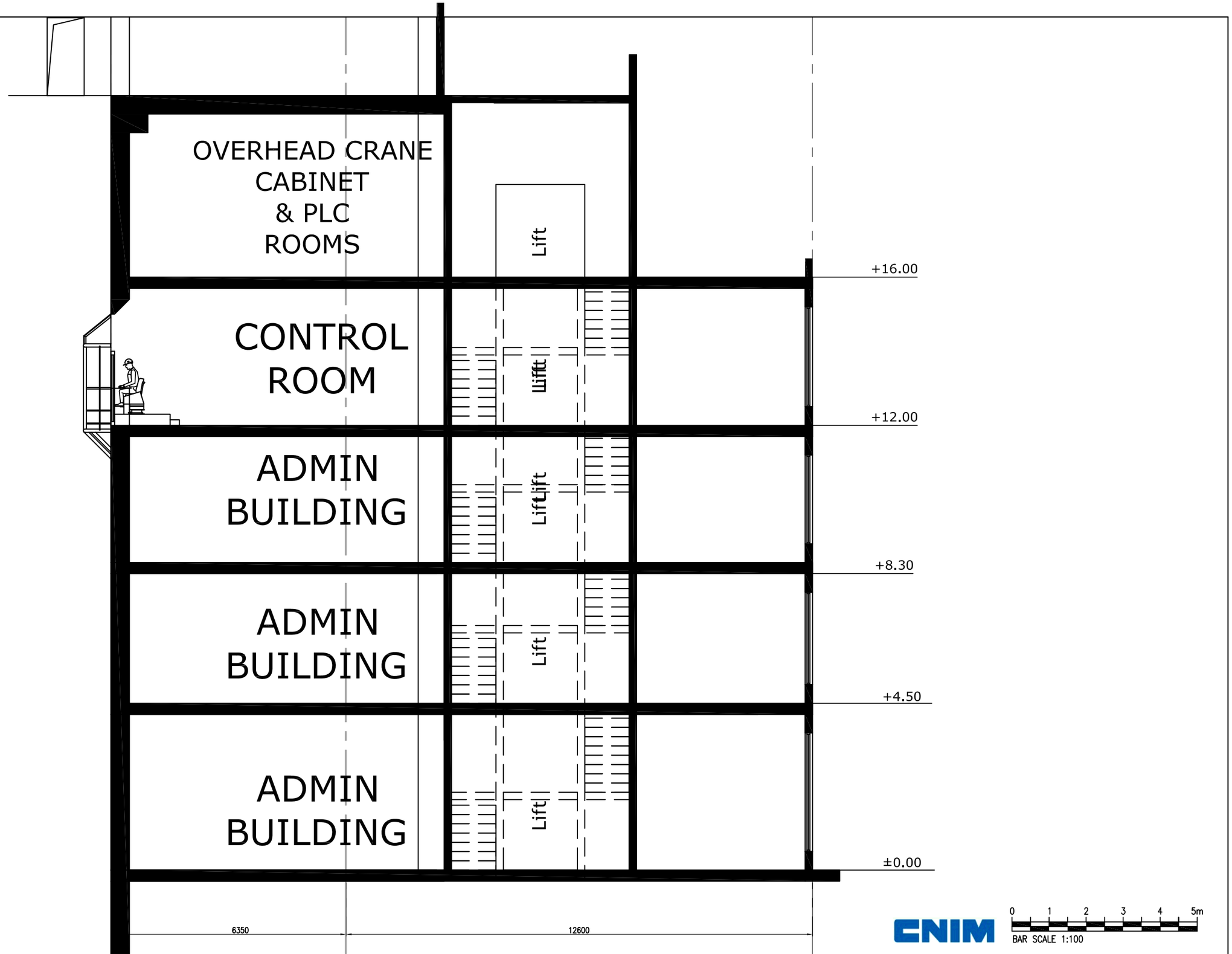

FORMAT A3 297x420=0,125m²

FILE NAME: 086-EN-15-G021-27-001001-0

CNIM

0 1 2 3 4 5m

BAR SCALE 1:100

REV.	DESCRIPTION	DATE	DESIGNED BY	CHECKED BY	APPROVED BY	APPROVED BY

DESIGNED BY	D.Dj.	OFFER N°: 086-EN/15-R2	EMP./PROJECT: CNIM/ BELGRADE EFW PLANT
DRAWN BY	A.F.		
CHECKED BY		DATE: 06.2017.	ENERGOPROJEKT ENTEL a.d.
APPROVED BY		SCL.: 1:100	
APPROVED BY		N°:	

DWG.SUBJ.: **ADMINISTRATION BUILDING SECTION**

DWG N°: **086-EN/15-G025**

SHEET OF REV.

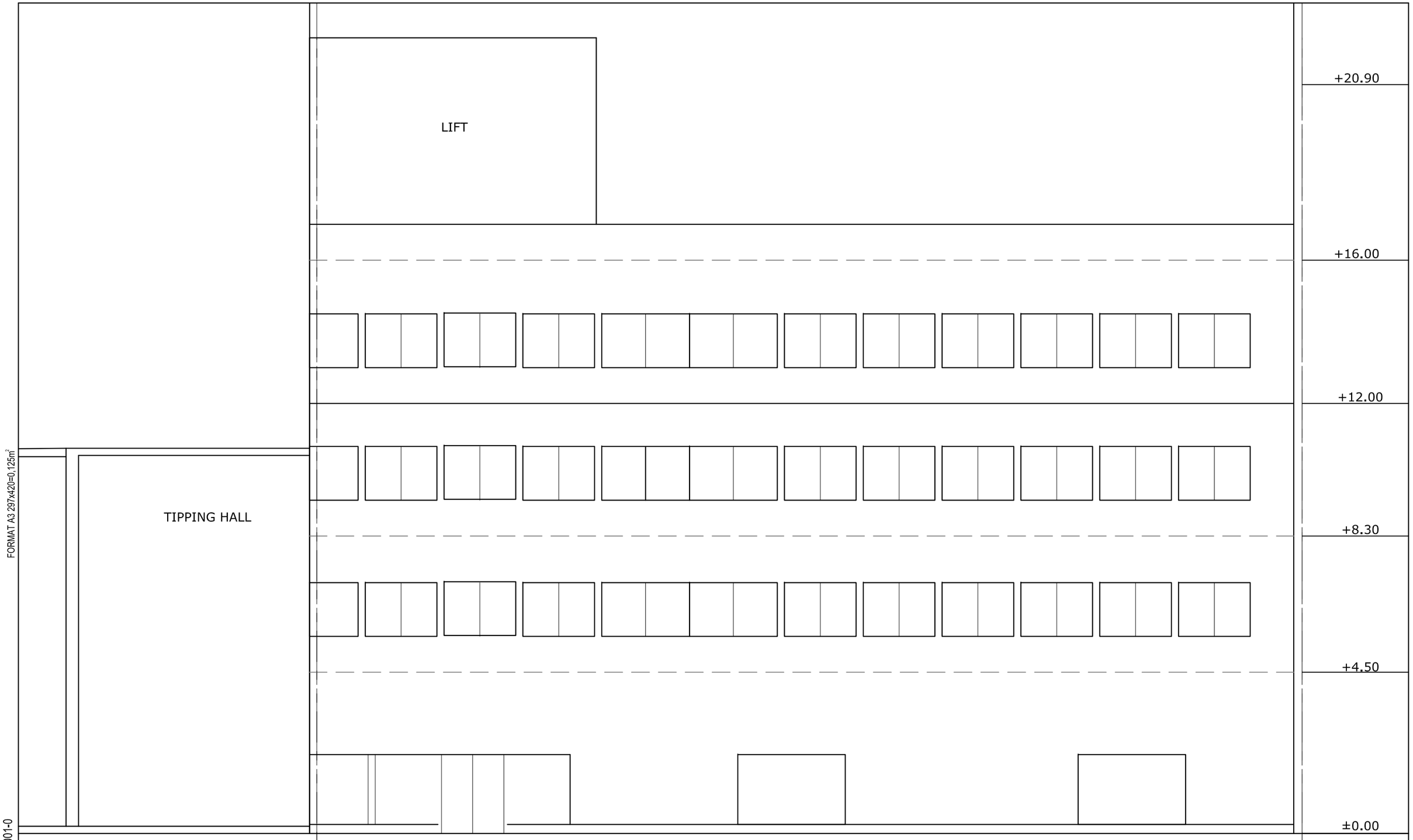

FORMAT A3 297x420=0,125m²

FILE NAME: 086-EN-15-G021-27-001001-0

REV.	DESCRIPTION	DATE	DESIGNED BY	CHECKED BY	APPROVED BY	APPROVED BY

DESIGNED BY	D.Dj.
DRAWN BY	A.F.
CHECKED BY	
APPROVED BY	
APPROVED BY	

OFFER N°: 086-EN/15-R2

DATE: 06.2017.

SCL.: 1:100

N°:

EMP./PROJECT: **CNIM/ BELGRADE EFW PLANT**

ENERGOPROJEKT ENTEL a.d.

DWG.SUBJ.: **ADMINISTRATION BUILDING ELEVATION**

DWG N°: **086-EN/15-G026**

SHEET OF REV.

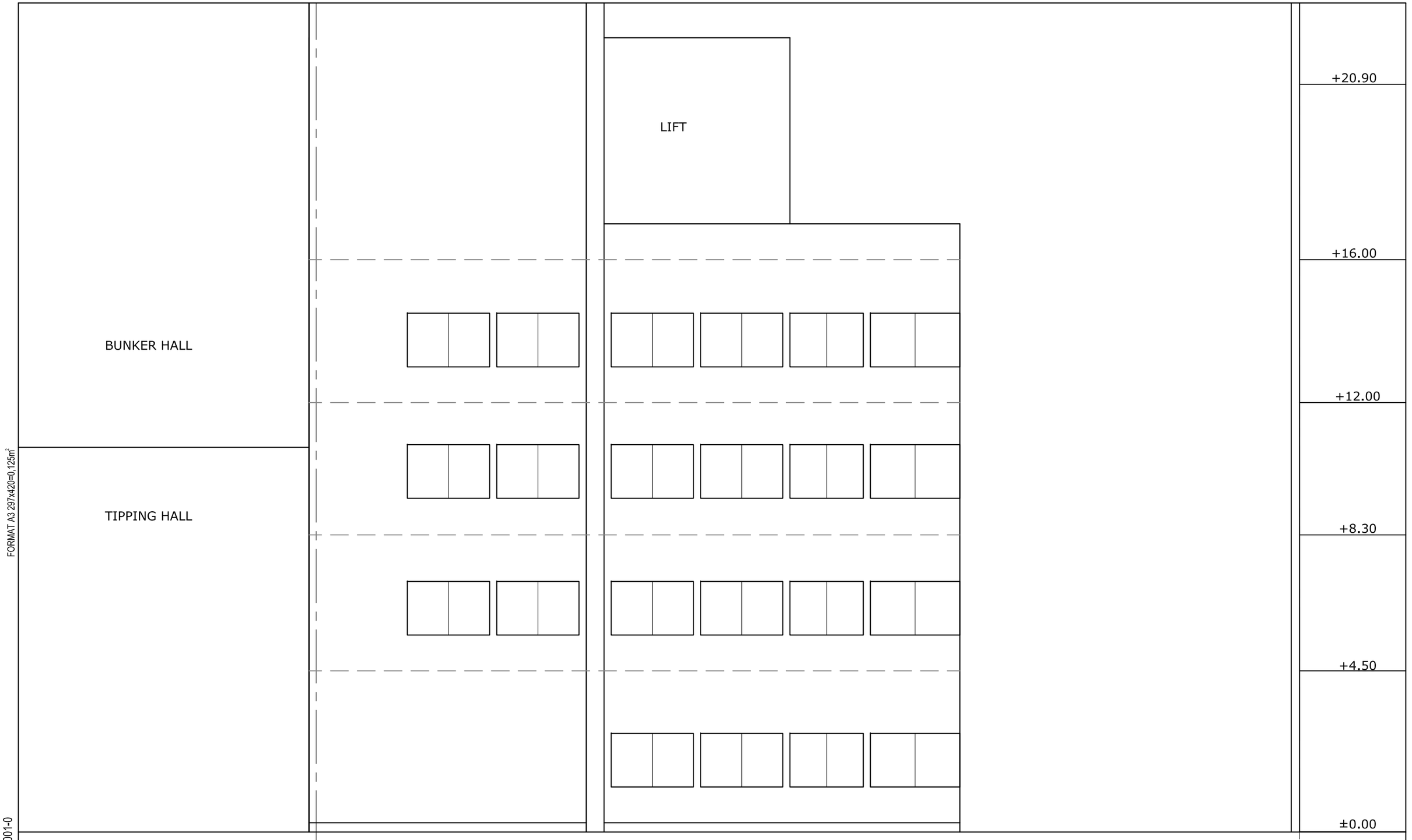

FORMAT A3 297x420=0,125m²

FILE NAME: 086-EN-15-G021-27-001001-0

REV.	DESCRIPTION	DATE	DESIGNED BY	CHECKED BY	APPROVED BY	APPROVED BY

DESIGNED BY	D.Dj.
DRAWN BY	A.F.
CHECKED BY	
APPROVED BY	
APPROVED BY	

OFFER N°: 086-EN/15-R2

DATE: 06.2017.

SCL.: 1:100

N°:

EMP./PROJECT: **CNIM/ BELGRADE EFW PLANT**

ENERGOPROJEKT ENTEL a.d.

DWG.SUBJ.: **ADMINISTRATION BUILDING ELEVATION**

DWG N°: **086-EN/15-G027**

SHEET OF REV.

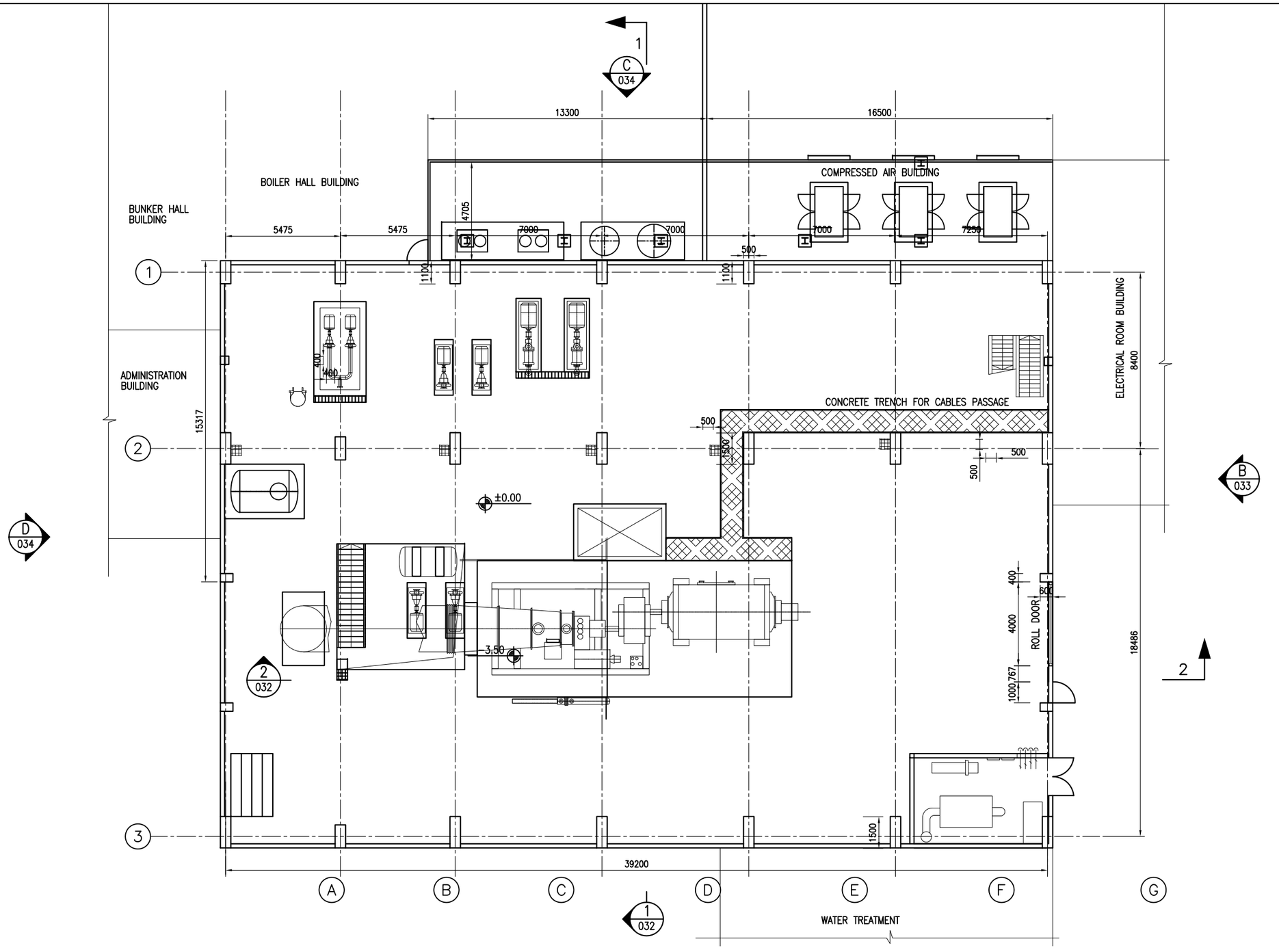

GROUND FLOOR PLAN

A
033

FORMAT A3 297x420=0,125m²

FILE NAME: 086-EN-15-G0028-34-001001-D

REV.	DESCRIPTION	DATE	DESIGNED BY	CHECKED BY	APPROVED BY	APPROVED BY

DESIGNED BY	D.Đ.	OFFER N°: 086-EN/15-R2
DRAWN BY	A.F.	
CHECHED BY		DATE: 06.2017.
APPROVED BY		SCALE: 1:200
APPROVED BY		N°:

EMP./PROJECT.:
CNIM/
BELGRADE EFW PLANT

ENERGOPROJEKT ENTEL a.d.

DWG.SUBJECT:
TURBINE HALL
GROUND FLOOR PLAN

DWG N°: **086-EN/15-G028**

SHEET 01 OF 01 REV. 0

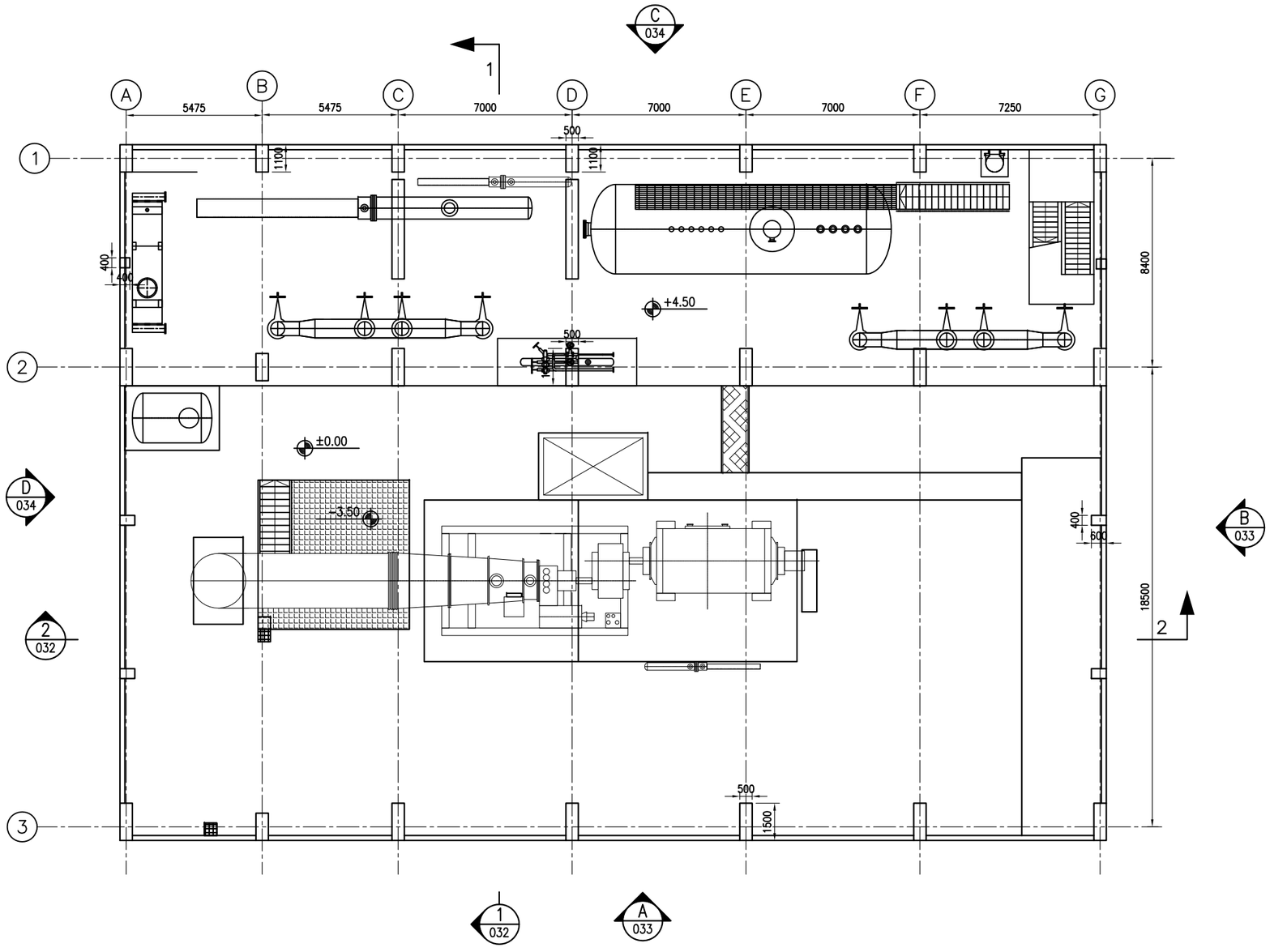

PLAN AT +4.50

FORMAT A3 297x420=0,125m²

FILE NAME: 086-EN-15-G0028-34-001001-D

REV.	DESCRIPTION	DATE	DESIGNED BY	CHECKED BY	APPROVED BY	APPROVED BY

DESIGNED BY	D.Đ.	OFFER N°: 086-EN/15-R2	EMP./PROJECT.: CNIM/ BELGRADE EFW PLANT
DRAWN BY	A.F.		
CHECHED BY		DATE: 06.2017.	ENERGOPROJEKT ENTEL a.d.
APPROVED BY		SCALE: 1:200	
APPROVED BY		N°:	

CNIM

DWG.SUBJECT: **TURBINE HALL LEVEL +4,50**

DWG N°: **086-EN/15-G029**

SHEET 01 OF 01 REV. 0

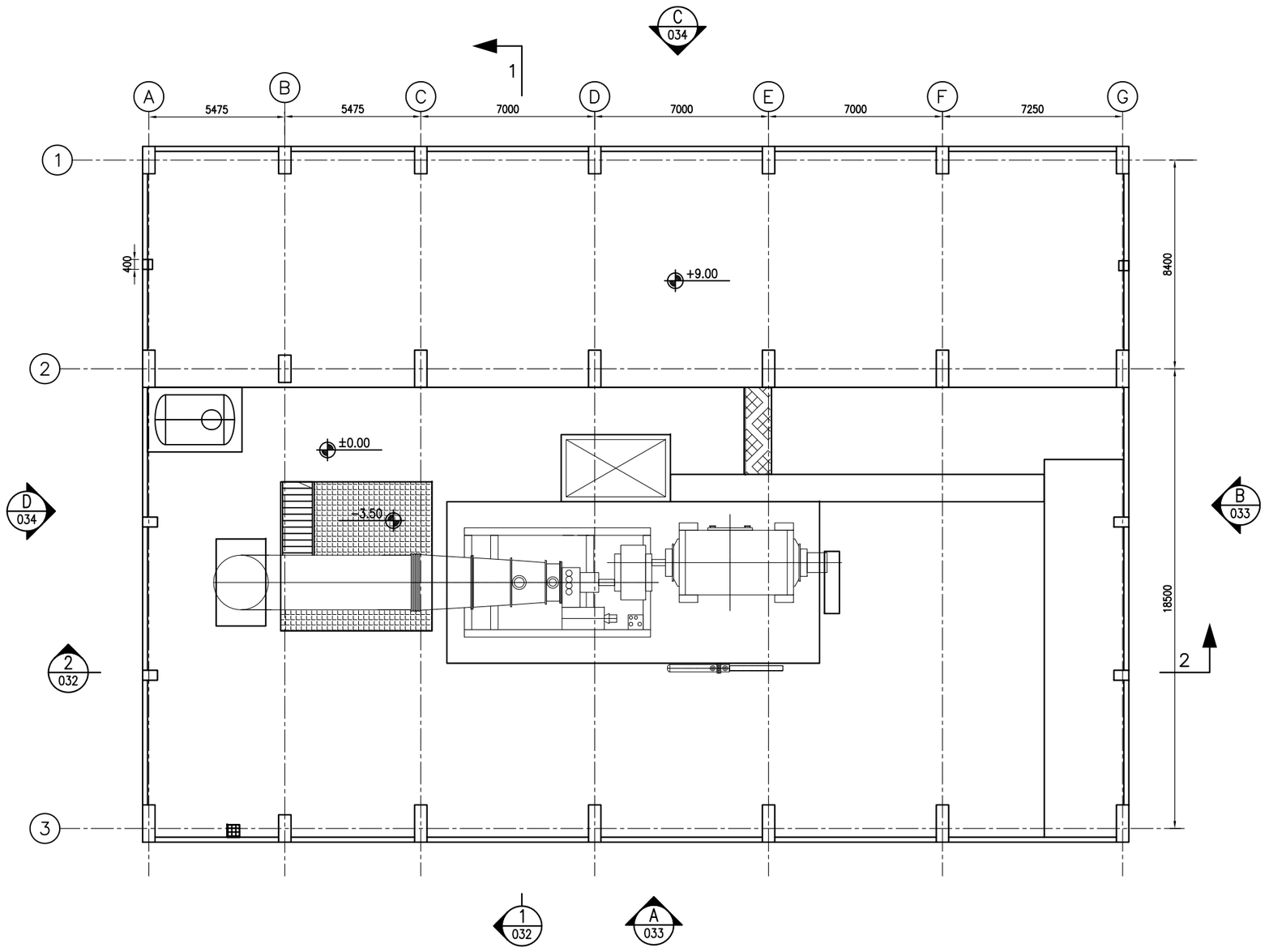

PLAN AT +9.00

FORMAT A3 297x420=0,125m²

FILE NAME: 086-EN-15-G0028-34-001001-D

REV.	DESCRIPTION	DATE	DESIGNED BY	CHECKED BY	APPROVED BY	APPROVED BY

DESIGNED BY	D.Đ.	OFFER N°:	086-EN/15-R2
DRAWN BY	A.F.		
CHECHED BY		DATE:	06.2017.
APPROVED BY		SCALE:	1:200
APPROVED BY		N°:	

EMP./PROJECT.:
CNIM/ BELGRADE EFW PLANT

ENERGOPROJEKT ENTEL a.d.

DWG.SUBJECT:
TURBINE HALL LEVEL +9,00

DWG N°: **086-EN/15-G030**

SHEET 01 OF 01 REV. 0

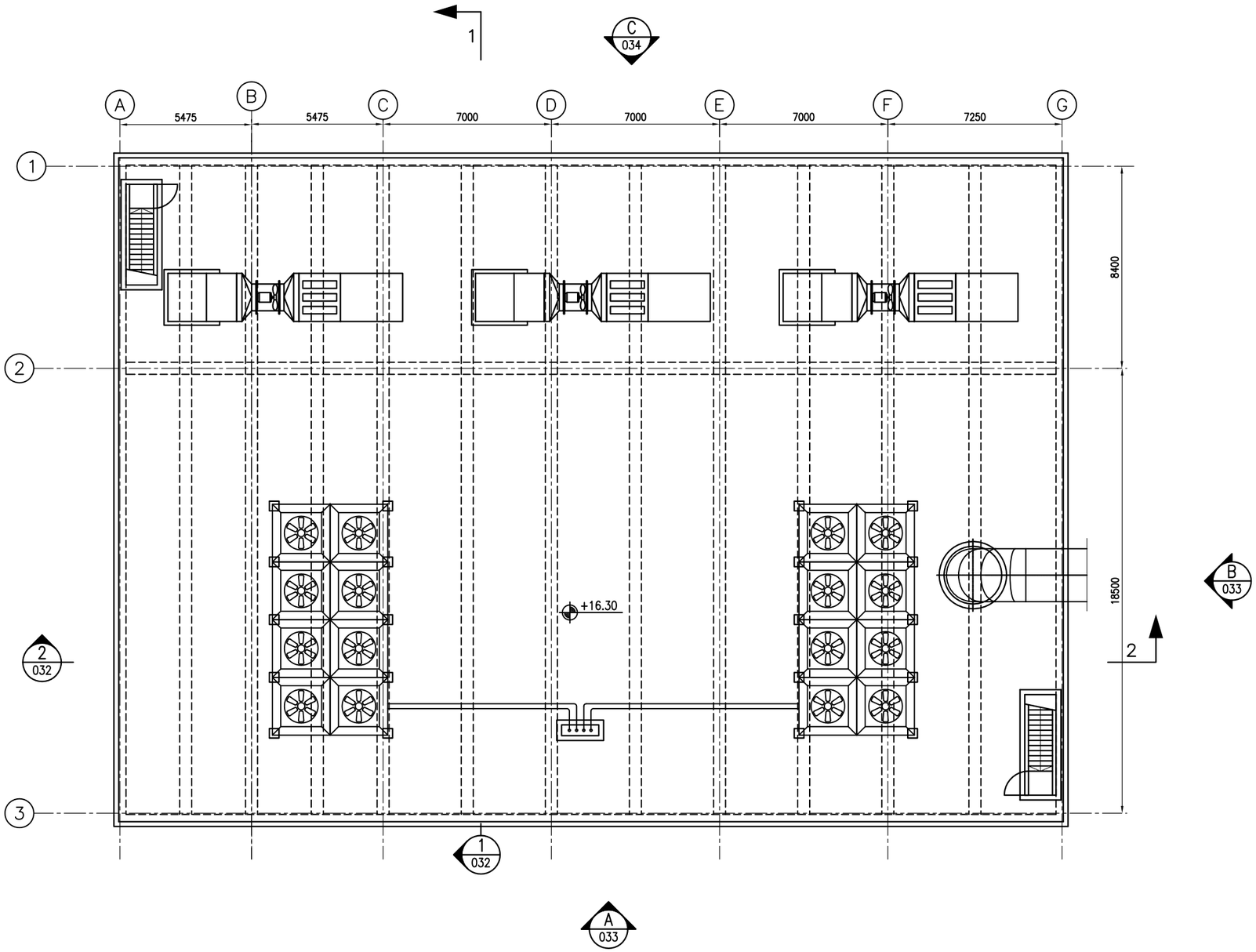

ROOF PLAN

FORMAT A3 297x420=0,125m²

FILE NAME: 086-EN-15-G0028-34-001001-D

REV.	DESCRIPTION	DATE	DESIGNED BY	CHECKED BY	APPROVED BY	APPROVED BY

DESIGNED BY	D.Đ.	OFFER N°: 086-EN/15-R2	EMP./PROJECT.: CNIM/ BELGRADE EFW PLANT
DRAWN BY	A.F.		
CHECHED BY		DATE: 06.2017.	ENERGOPROJEKT ENTEL a.d.
APPROVED BY		SCALE: 1:200	
APPROVED BY		N°:	

DWG.SUBJECT: **TURBINE HALL ROOF PLAN**

DWG N°: **086-EN/15-G031**

SHEET 01 OF 01 REV. 0

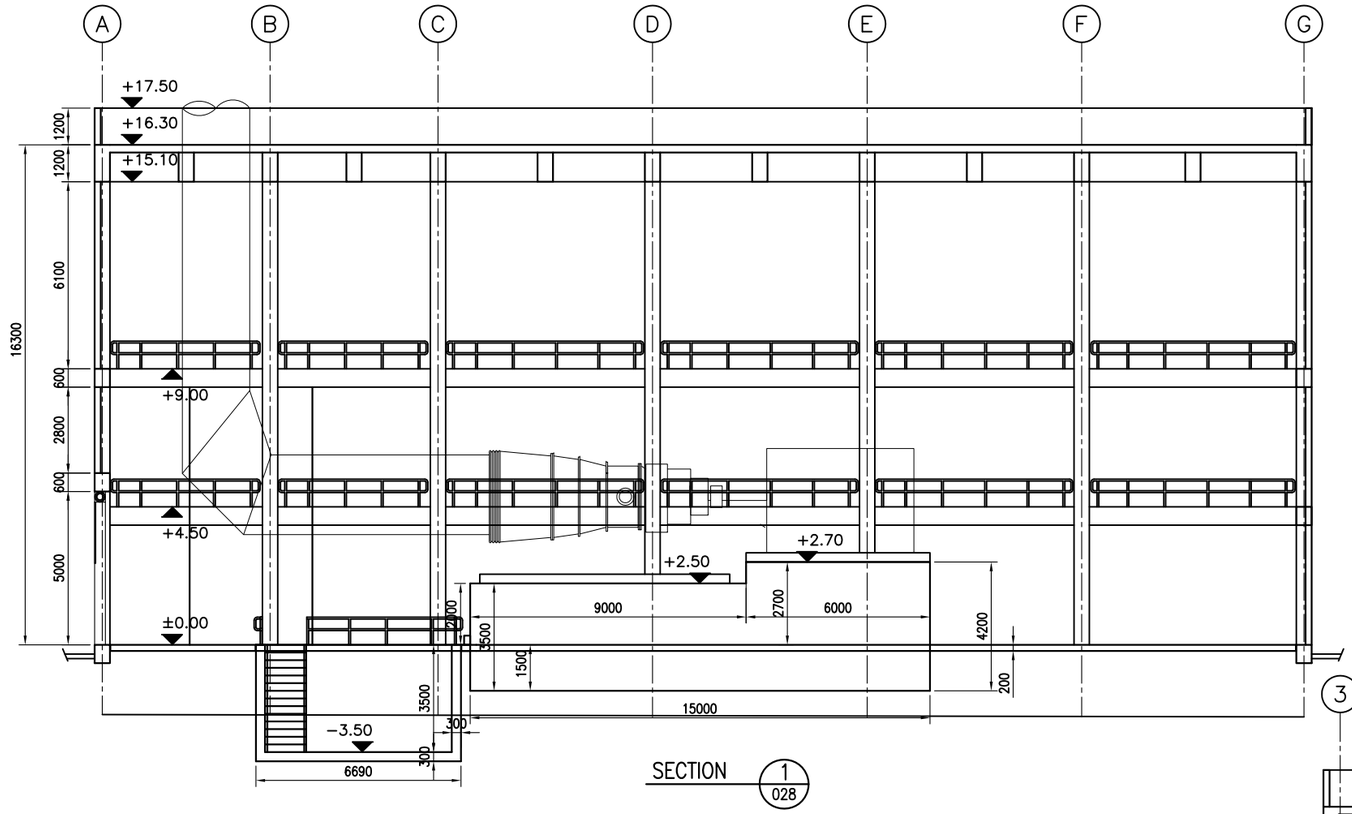

SECTION 1 / 028

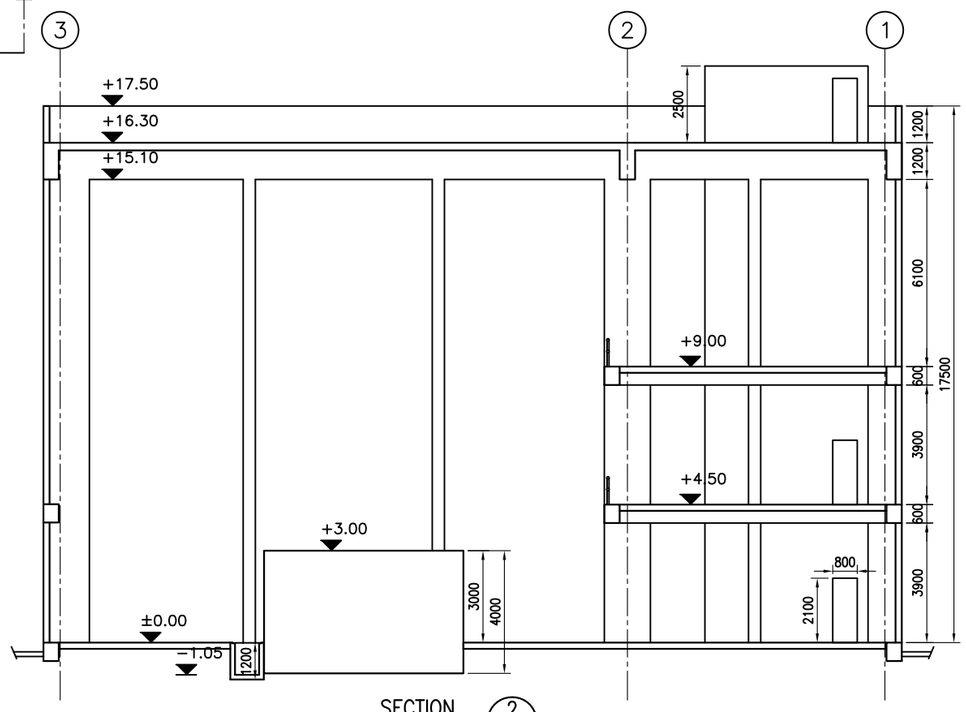

SECTION 2 / 028

CNIM

FORMAT A3 297x420=0,125m²

FILE NAME: 086-EN-15-G0028-34-001001-D

REV.	DESCRIPTION	DATE	DESIGNED BY	CHECKED BY	APPROVED BY	APPROVED BY

DESIGNED BY	D.Đ.
DRAWN BY	A.F.
CHECHED BY	
APPROVED BY	
APPROVED BY	

OFFER N°: 086-EN/15-R2

DATE: 06.2017.

SCALE: 1:200

N°:

EMP./PROJECT.:
CNIM/
BELGRADE EFW PLANT

ENERGOPROJEKT ENTEL a.d.

DWG.SUBJECT:
TURBINE HALL
SECTIONS 1-1, 2-2

DWG N°: **086-EN/15-G032**

SHEET 01 OF 01 REV. 0

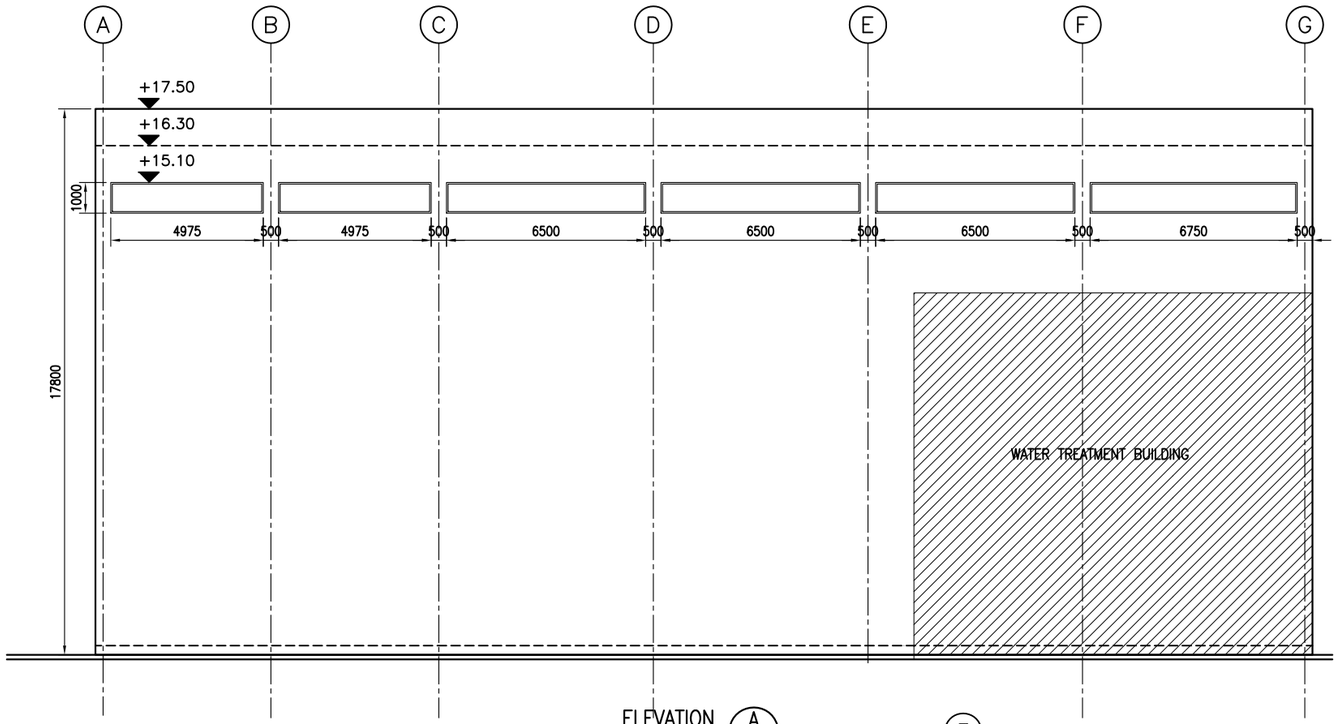

ELEVATION A 028

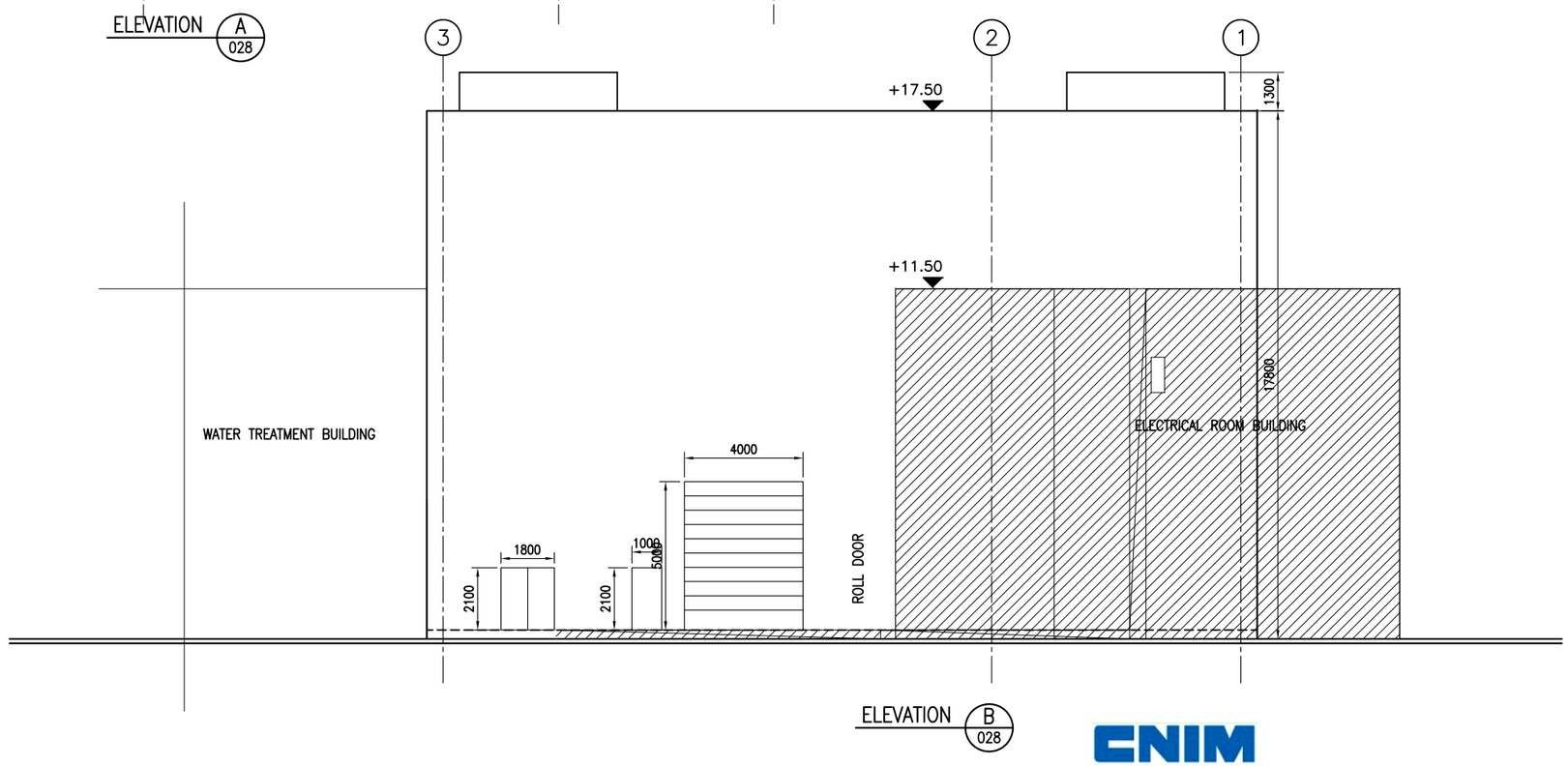

ELEVATION B 028

CNIM

FORMAT A3 297x420=0,125m²

FILE NAME: 086-EN-15-G0028-34-001001-D

REV.	DESCRIPTION	DATE	DESIGNED BY	CHECKED BY	APPROVED BY	APPROVED BY

DESIGNED BY	D.Đ.	OFFER N°: 086-EN/15-R2	EMP./PROJECT.: CNIM/ BELGRADE EFW PLANT
DRAWN BY	A.F.		
CHECHED BY		DATE: 06.2017.	
APPROVED BY		SCALE: 1:200	ENERGOPROJEKT ENTEL a.d.
APPROVED BY		N°:	

DWG.SUBJECT: **TURBINE HALL ELEVATION A & B**

DWG N°: **086-EN/15-G033**

SHEET 01 OF 01 REV. 0

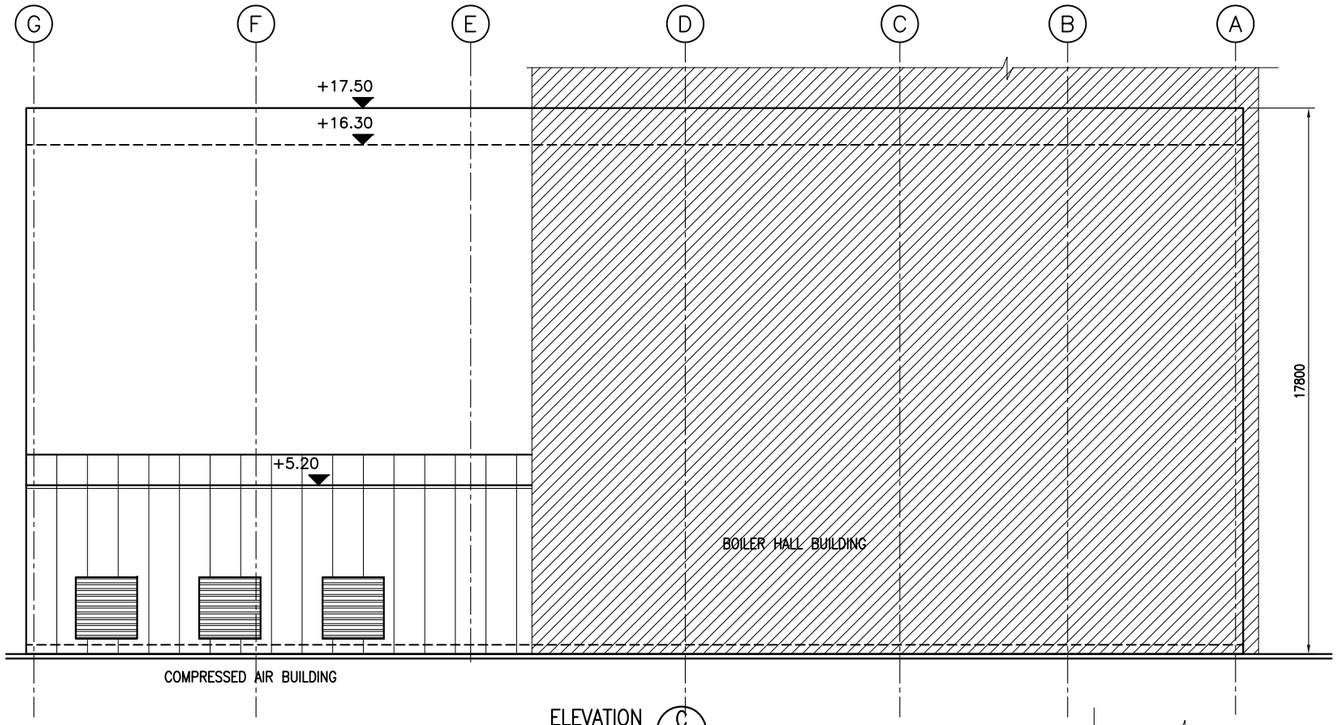

ELEVATION C 034

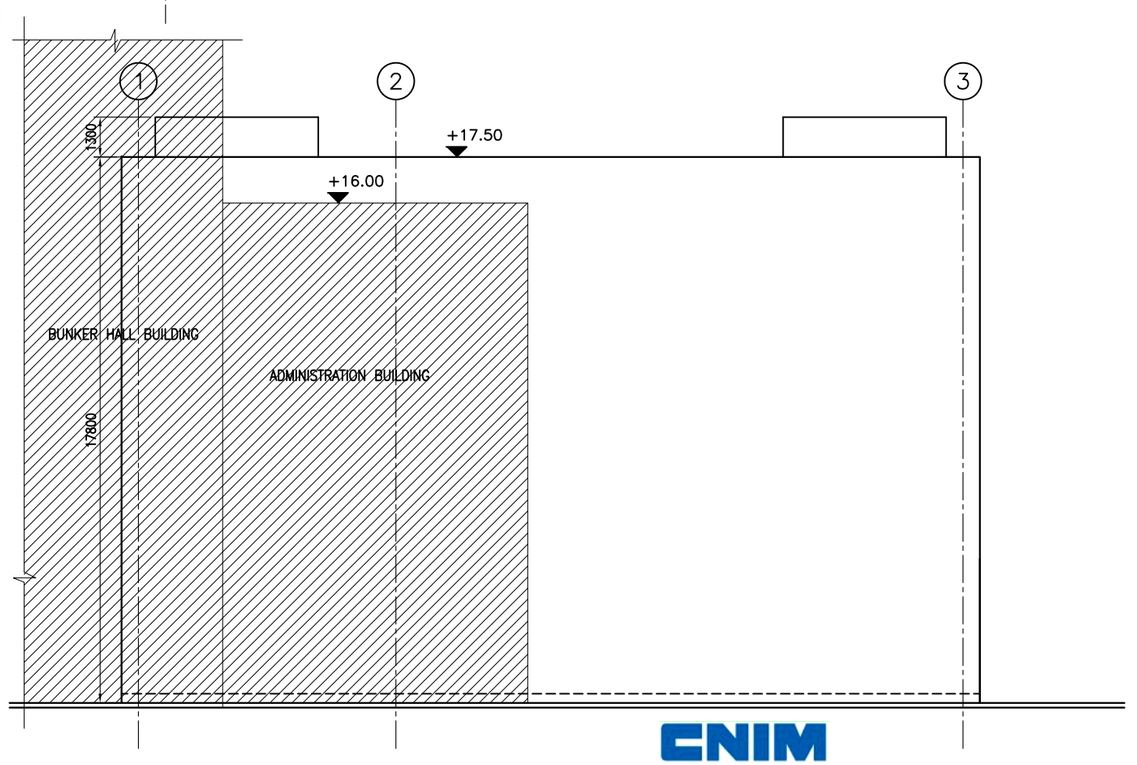

ELEVATION D 034

FORMAT A3 297x420=0,125m²

FILE NAME: 086-EN-15-G0028-34-001001-D

REV.	DESCRIPTION	DATE	DESIGNED BY	CHECKED BY	APPROVED BY	APPROVED BY

DESIGNED BY	D.Đ.
DRAWN BY	A.F.
CHECHED BY	
APPROVED BY	
APPROVED BY	

OFFER N°: 086-EN/15-R2

DATE: 06.2017.

SCALE: 1:200

N°:

EMP./PROJECT.:
CNIM/ BELGRADE EFW PLANT

ENERGOPROJEKT ENTEL a.d.

DWG.SUBJECT:
TURBINE HALL ELEVATIONS C & D

DWG N°: **086-EN/15-G034**

SHEET 01 OF 01 REV. 0

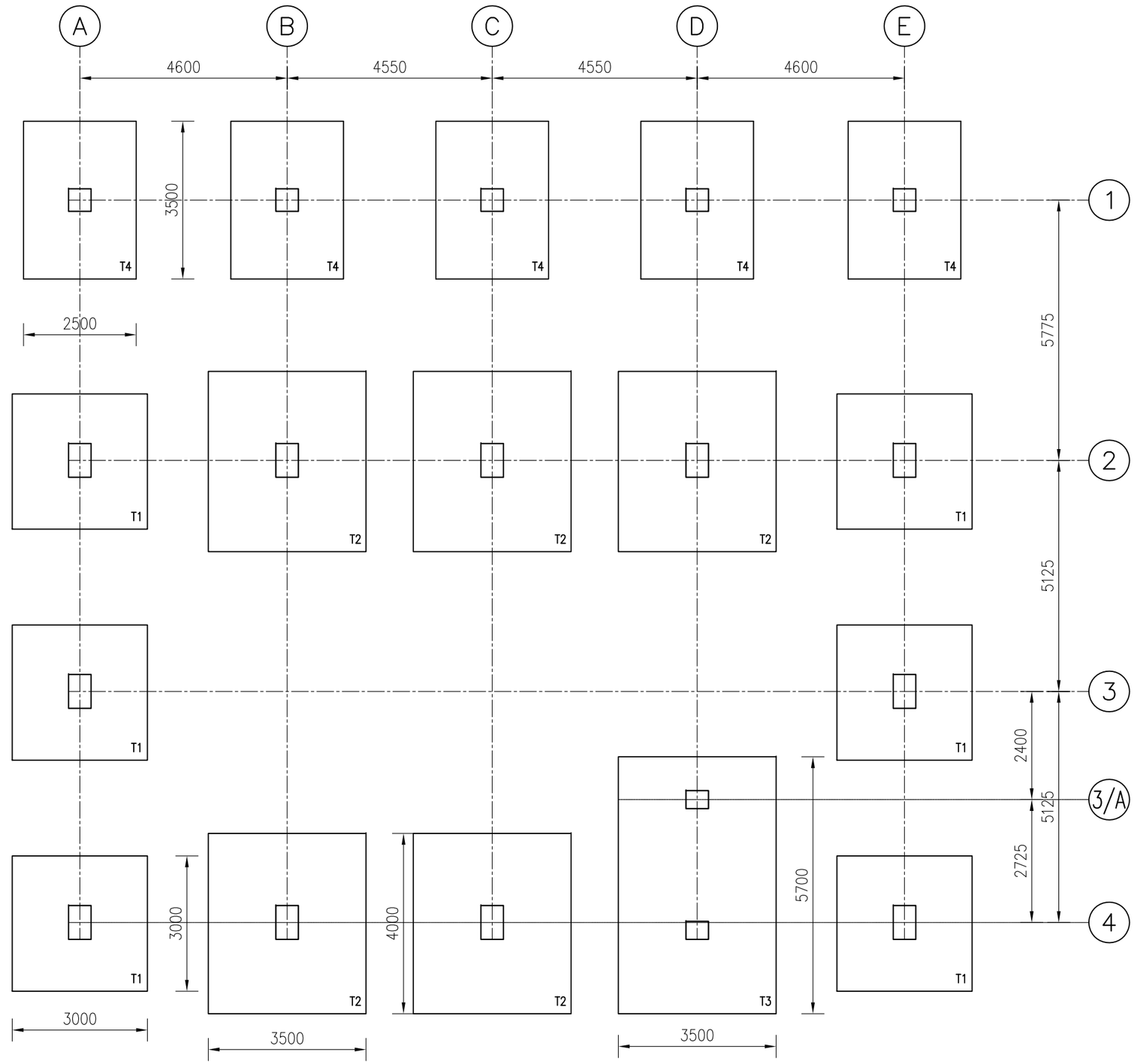

FOUNDATION PLAN

FORMAT A3 297x420=0,125m²

FILE NAME: 086-EN-15-ELECTRICAL

REV.	DESCRIPTION	DATE	DESIGNED BY	CHECKED BY	APPROVED BY	APPROVED BY

DESIGNED BY	D.Đ.
DRAWN BY	A.F.
CHECHED BY	
APPROVED BY	
APPROVED BY	

OFFER N°: 086-EN/15

DATE: 06.2017.

SCALE: 1:100

N°:

EMP./PROJECT.:
CNIM/
BELGRADE EFW PLANT

ENERGOPROJEKT ENTEL a.d.

DWG.SUBJECT:
ELECTRICAL BUILDING
FOUNDATION PLAN

DWG N°: **086-EN/15-G035**

SHEET 01 OF 01 REV. 0

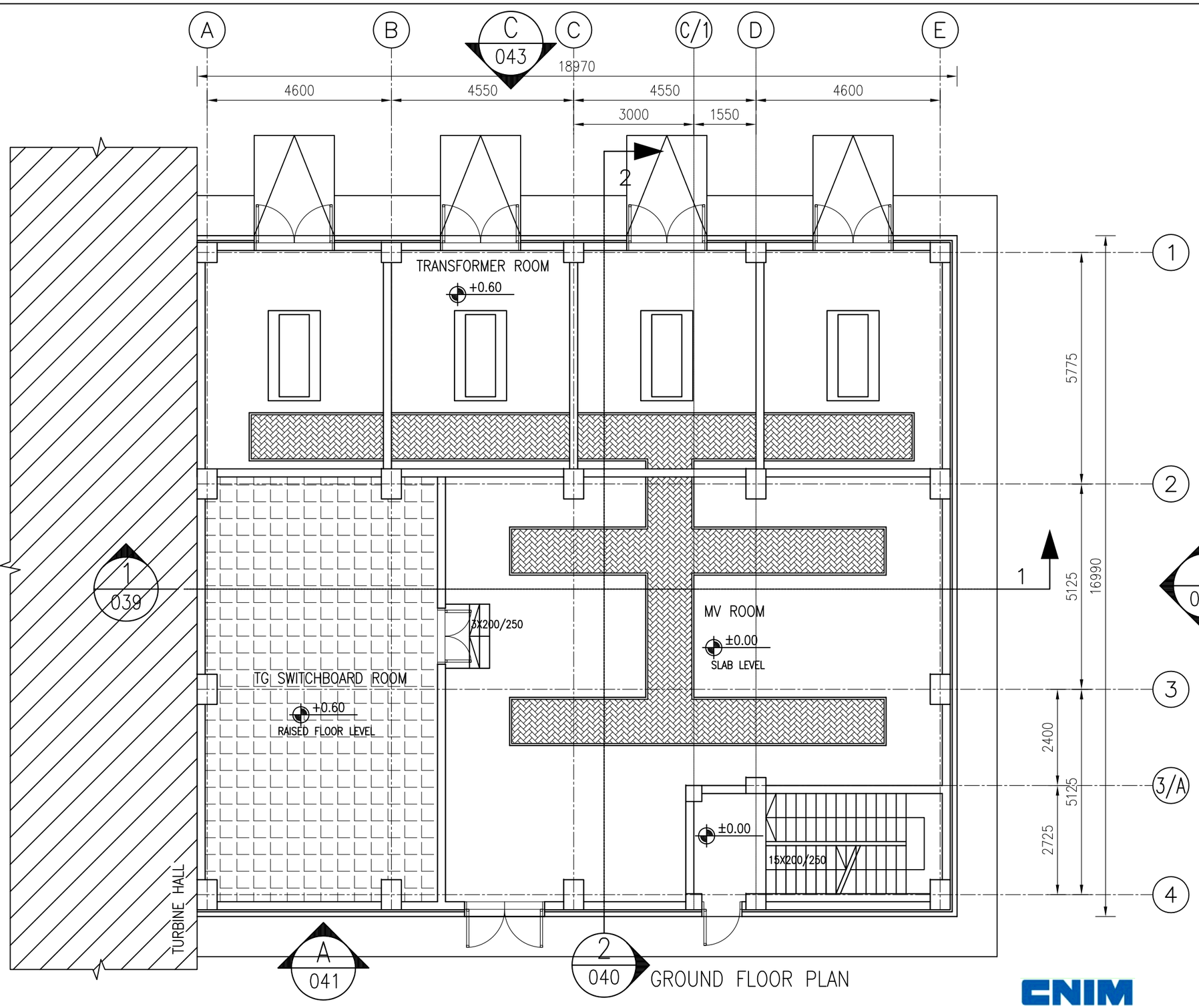

FORMAT A3 297x420=0,125m²

FILE NAME: 086-EN-15-ELECTRICAL

REV.	DESCRIPTION	DATE	DESIGNED BY	CHECKED BY	APPROVED BY	APPROVED BY

DESIGNED BY	D.Đ.	OFFER N°: 086-EN/15	EMP./PROJECT.: CNIM/ BELGRADE EFW PLANT
DRAWN BY	A.F.		
CHECHED BY		DATE: 06.2017.	
APPROVED BY		SCALE: 1:100	
APPROVED BY		N°:	

CNIM

ENERGOPROJEKT ENTEL a.d.

DWG.SUBJECT: **ELECTRICAL BUILDING GROUND FLOOR PLAN**

DWG N°: **086-EN/15-G036**

SHEET 01 OF 01 REV. 0

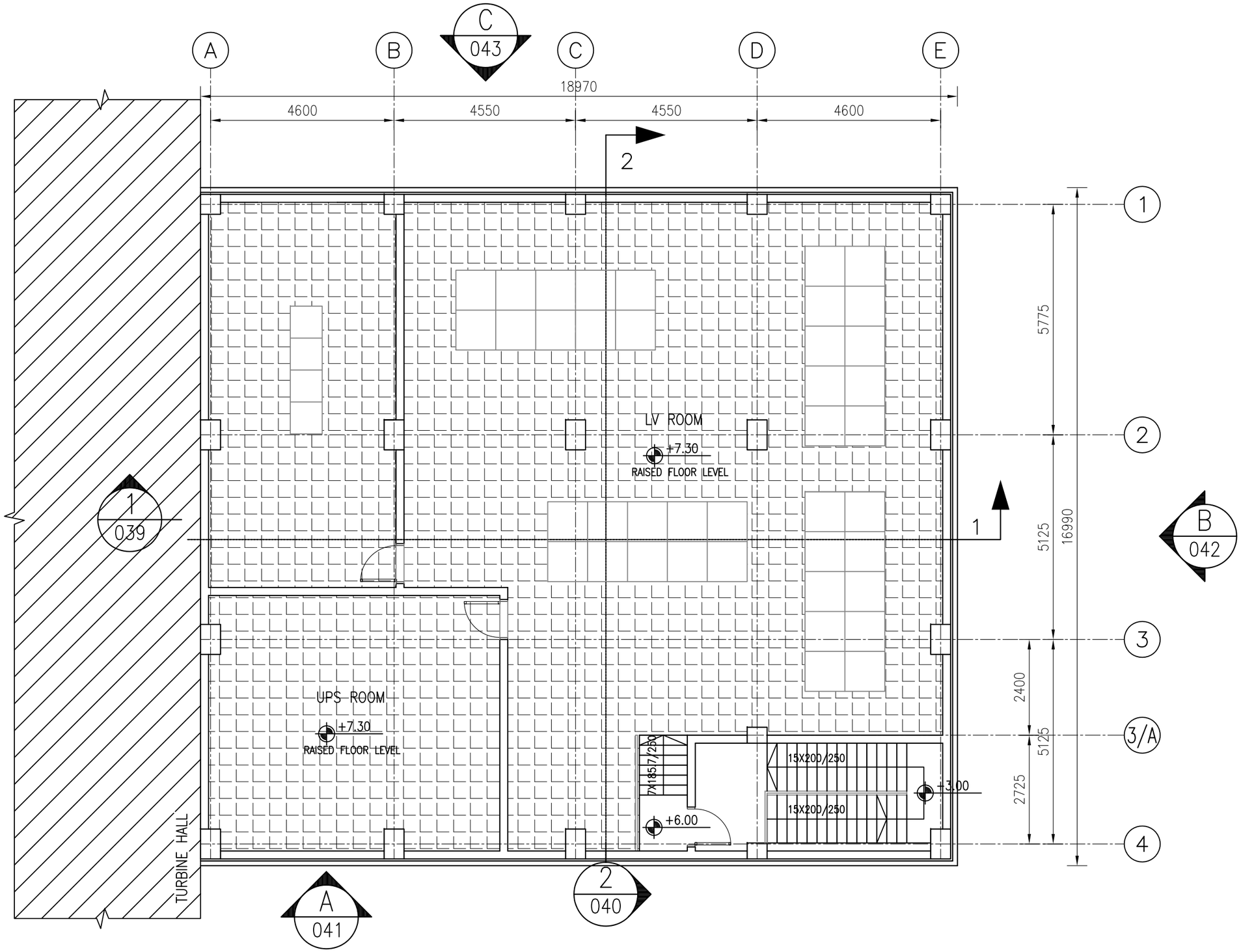

FIRST FLOOR PLAN

FORMAT A3 297x420=0,125m²

FILE NAME: 086-EN-15-ELECTRICAL

REV.	DESCRIPTION	DATE	DESIGNED BY	CHECKED BY	APPROVED BY	APPROVED BY

DESIGNED BY	D.Đ.	OFFER N°: 086-EN/15	EMP./PROJECT.: CNIM/ BELGRADE EFW PLANT
DRAWN BY	A.F.		
CHECHED BY		DATE: 06.2017.	
APPROVED BY		SCALE: 1:100	
APPROVED BY		N°:	

ENERGOPROJEKT ENTEL a.d.

DWG.SUBJECT: **ELECTRICAL BUILDING LEVEL +7,30**

DWG N°: **086-EN/15-G037**

SHEET 01 OF 01 REV. 0

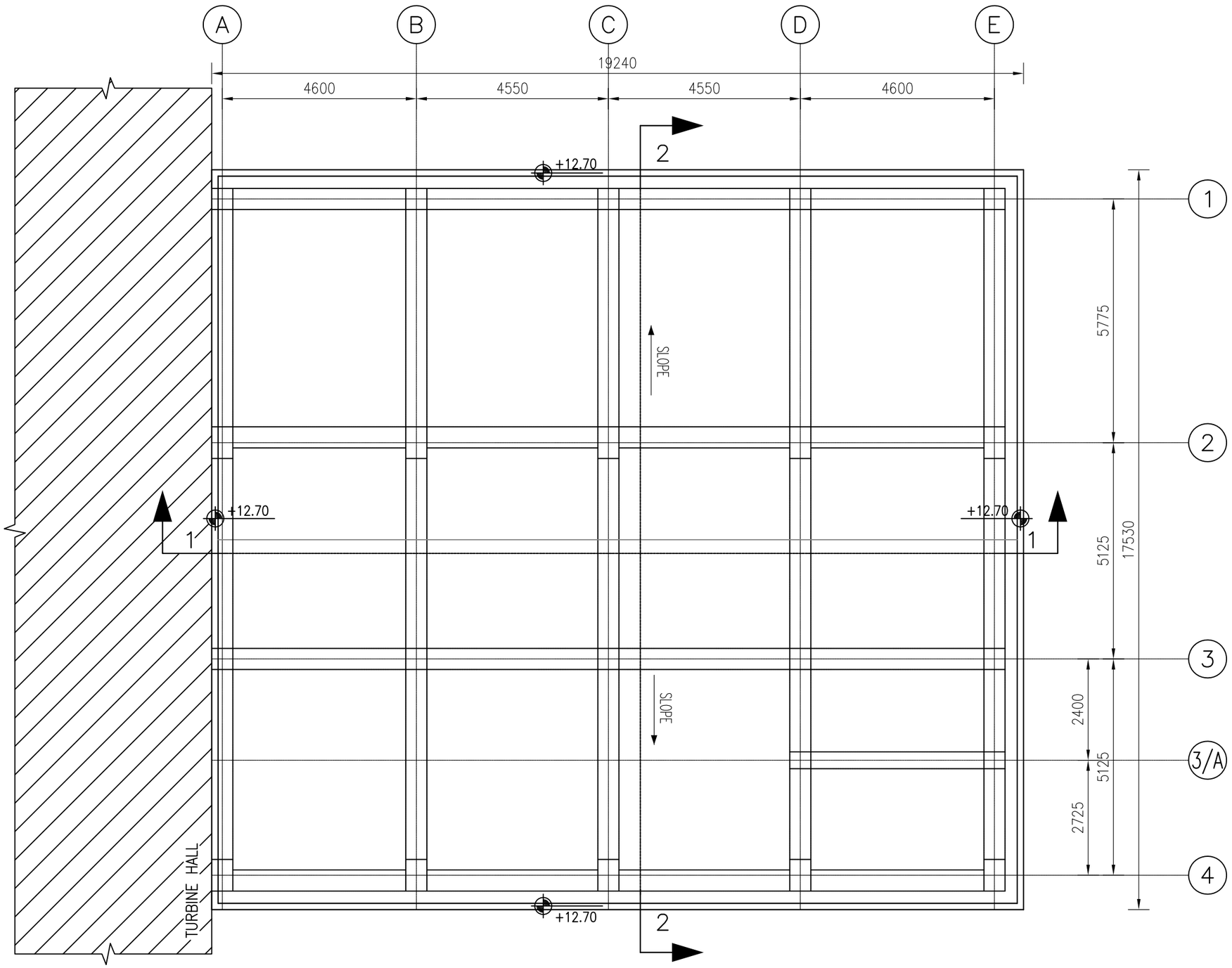

ROOF PLAN

FORMAT A3 297x420=0,125m²

FILE NAME: 086-EN-15-ELECTRICAL

REV.	DESCRIPTION	DATE	DESIGNED BY	CHECKED BY	APPROVED BY	APPROVED BY

DESIGNED BY	D.Đ.
DRAWN BY	A.F.
CHECHED BY	
APPROVED BY	
APPROVED BY	

OFFER N°: 086-EN/15

DATE: 06.2017.

SCALE: 1:100

N°:

EMP./PROJECT.: CNIM/ BELGRADE EFW PLANT

ENERGOPROJEKT ENTEL a.d.

DWG.SUBJECT: ELECTRICAL BUILDING ROOF PLAN

DWG N°: 086-EN/15-G038

SHEET 01 OF 01 REV. 0

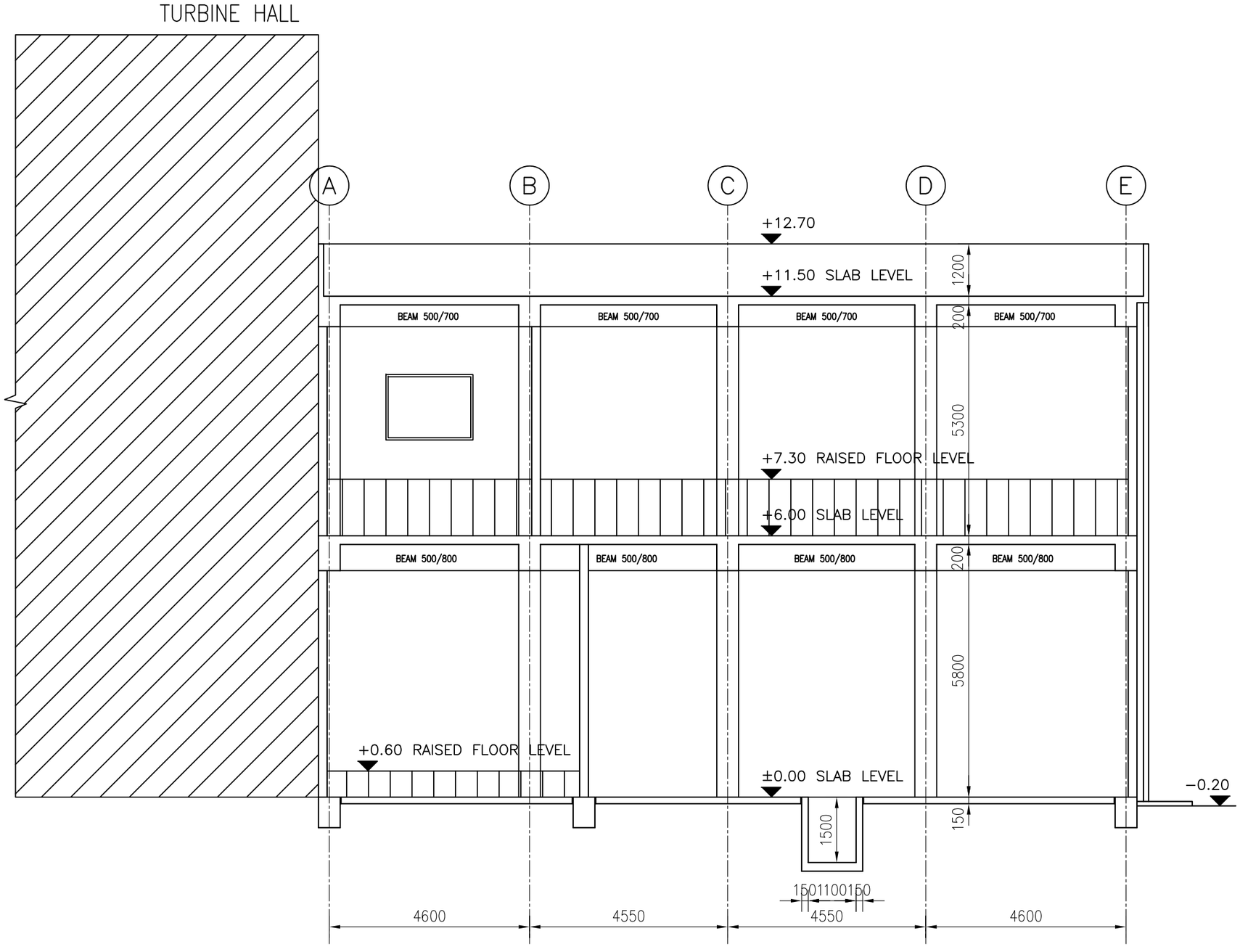

SECTION 1/036

FORMAT A3 297x420=0,125m²

FILE NAME: 086-EN-15-ELECTRICAL

REV.	DESCRIPTION	DATE	DESIGNED BY	CHECKED BY	APPROVED BY	APPROVED BY

DESIGNED BY	D.Đ.
DRAWN BY	A.F.
CHECHED BY	
APPROVED BY	
APPROVED BY	

OFFER N°: 086-EN/15

DATE: 06.2017.

SCALE: 1:100

N°:

EMP./PROJECT.: **CNIM/ BELGRADE EFW PLANT**

ENERGOPROJEKT ENTEL a.d.

DWG.SUBJECT: **ELECTRICAL BUILDING SECTION 1-1**

DWG N°: **086-EN/15-G039**

SHEET 01 OF 01 REV. 0

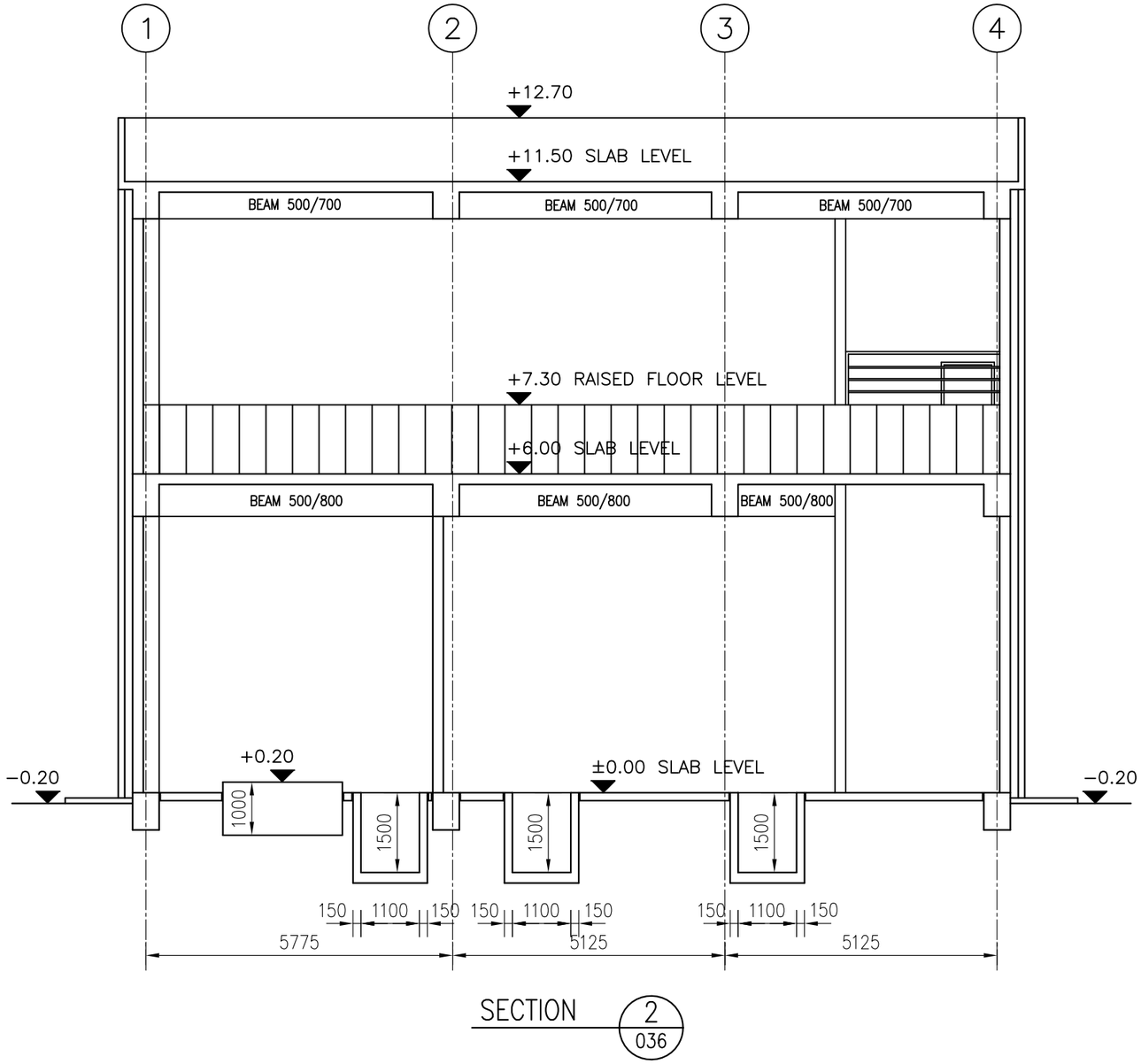

SECTION 2 / 036

FORMAT A3 297x420=0,125m²

FILE NAME: 086-EN-15-ELECTRICAL

REV.	DESCRIPTION	DATE	DESIGNED BY	CHECKED BY	APPROVED BY	APPROVED BY

DESIGNED BY	D.Đ.
DRAWN BY	A.F.
CHECHED BY	
APPROVED BY	
APPROVED BY	

OFFER N°: 086-EN/15
DATE: 06.2017.
SCALE: 1:100
N°:

EMP./PROJECT.: CNIM/ BELGRADE EFW PLANT

ENERGOPROJEKT ENTEL a.d.

DWG.SUBJECT: **ELECTRICAL BUILDING SECTION 2-2**

DWG N°: **086-EN/15-G040**

SHEET 01 OF 01 REV. 0

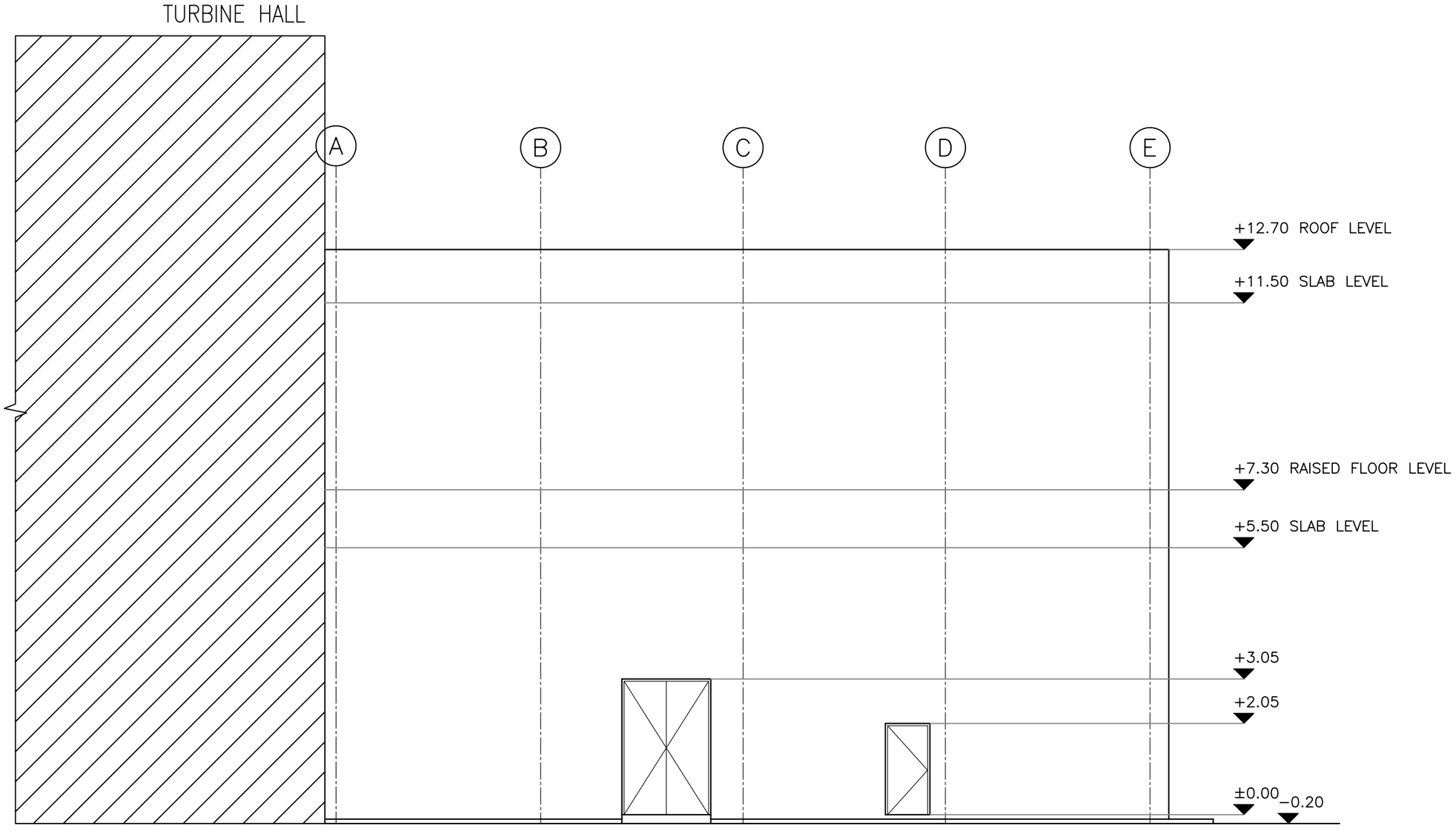

ELEVATION A / 036

FORMAT A3 297x420=0,125m²

FILE NAME: 086-EN-15-ELECTRICAL

REV.	DESCRIPTION	DATE	DESIGNED BY	CHECKED BY	APPROVED BY	APPROVED BY

DESIGNED BY	D.Đ.
DRAWN BY	A.F.
CHECHED BY	
APPROVED BY	
APPROVED BY	

OFFER N°: 086-EN/15
DATE: 06.2017.
SCALE: 1:100
N°:

EMP./PROJECT.:
CNIM/
BELGRADE EFW PLANT

ENERGOPROJEKT ENTEL a.d.

DWG.SUBJECT:
ELECTRICAL BUILDING
ELEVATION A

DWG N°: **086-EN/15-G041**

SHEET 01 OF 01 REV. 0

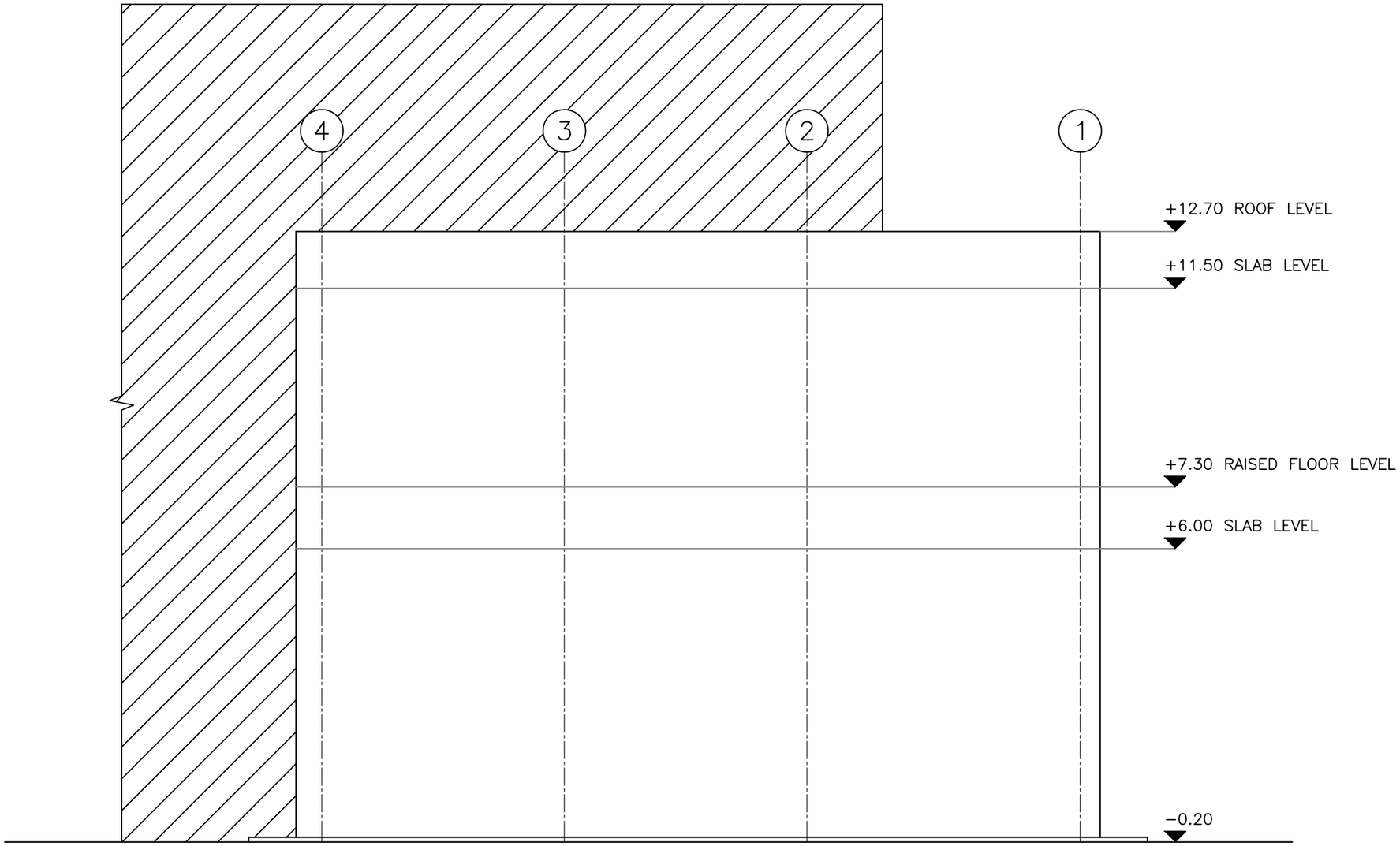

ELEVATION B 036

FORMAT A3 297x420=0,125m²

FILE NAME: 086-EN-15-ELECTRICAL

REV.	DESCRIPTION	DATE	DESIGNED BY	CHECKED BY	APPROVED BY	APPROVED BY	APPROVED BY

DESIGNED BY	D.Đ.
DRAWN BY	A.F.
CHECHED BY	
APPROVED BY	
APPROVED BY	

OFFER N°: 086-EN/15

DATE: 06.2017.

SCALE: 1:100

N°:

EMP./PROJECT.: **CNIM/ BELGRADE EFW PLANT**

ENERGOPROJEKT ENTEL a.d.

DWG.SUBJECT: **ELECTRICAL BUILDING ELEVATION B**

DWG N°: **086-EN/15-G042**

SHEET 01 OF 01 REV. 0

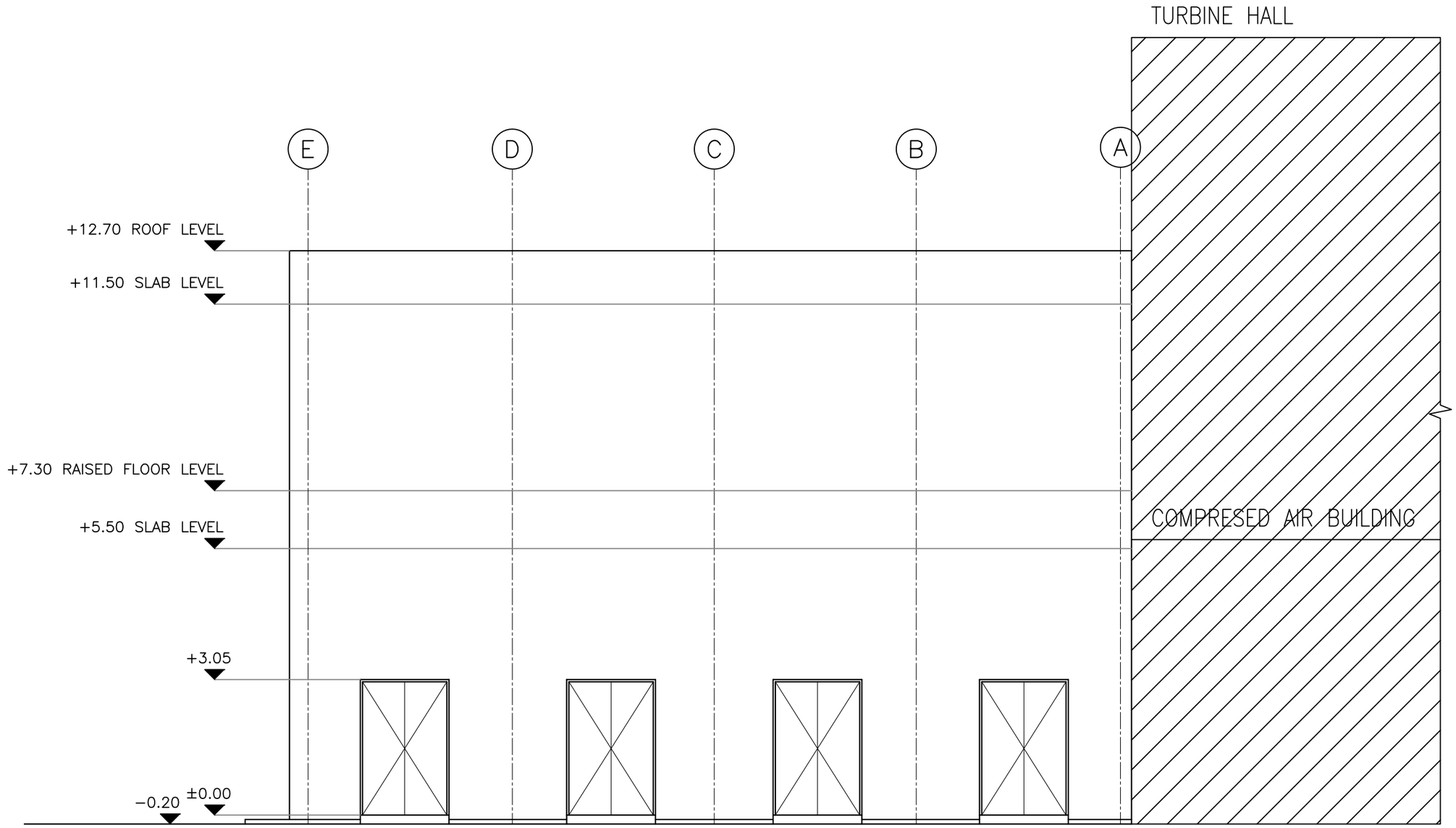

ELEVATION C / 036

FORMAT A3 297x420=0,125m²

FILE NAME: 086-EN-15-ELECTRICAL

REV.	DESCRIPTION	DATE	DESIGNED BY	CHECKED BY	APPROVED BY	APPROVED BY

DESIGNED BY	D.Đ.	OFFER N°: 086-EN/15	
DRAWN BY	A.F.		
CHECHED BY		DATE: 06.2017.	
APPROVED BY		SCALE: 1:100	
APPROVED BY		N°:	

EMP./PROJECT.:
CNIM/ BELGRADE EFW PLANT

ENERGOPROJEKT ENTEL a.d.

DWG.SUBJECT:
ELECTRICAL BUILDING ELEVATION C

DWG N°: **086-EN/15-G043**

SHEET 01 OF 01 REV. 0

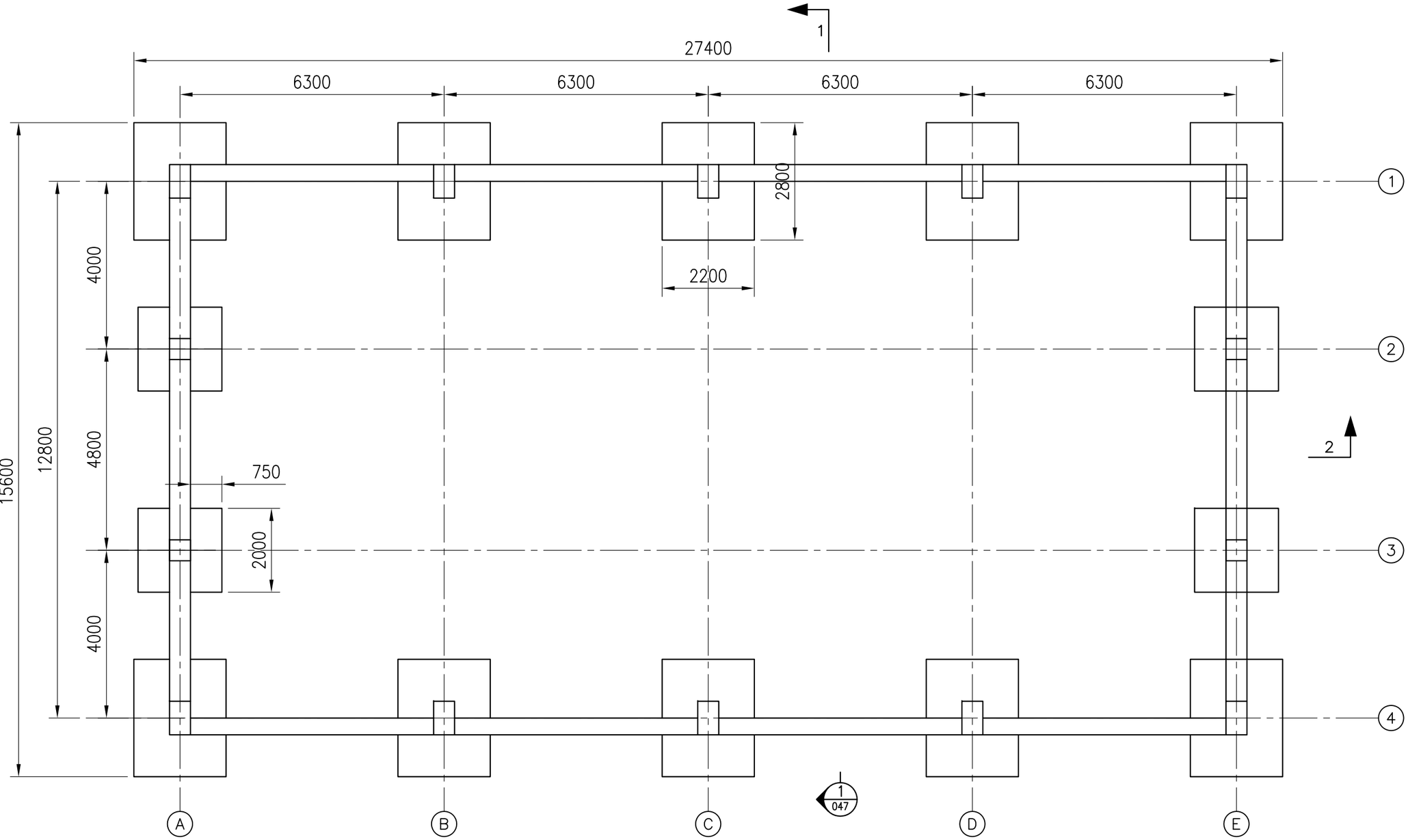

FOUNDATION

0 1 2 3 4 5m
BAR SCALE 1:100

CNIM

							DESIGNED BY	D.Đ.	OFFER N°: 086-EN/15-R2	EMP./PROJECT.: CNIM/ BELGRADE EFW PLANT
							DRAWN BY	A.F.		
							CHECHED BY		DATE: 06.2017.	ENERGOPROJEKT ENTEL a.d.
							APPROVED BY		SCALE: 1:100	
REV.	DESCRIPTION	DATE	DESIGNED BY	CHECKED BY	APPROVED BY	APPROVED BY	APPROVED BY		N°:	

DWG,SUBJECT: **WATER TREATMENT BUILDING FOUNDATION PLAN**

DWG N°: **086-EN/15-G044**

SHEET 01 OF 01 REV. 0

FILE NAME: 086-EN-15- WATER TREATMENT - SVE

FORMAT A3 297x420=0,125m²

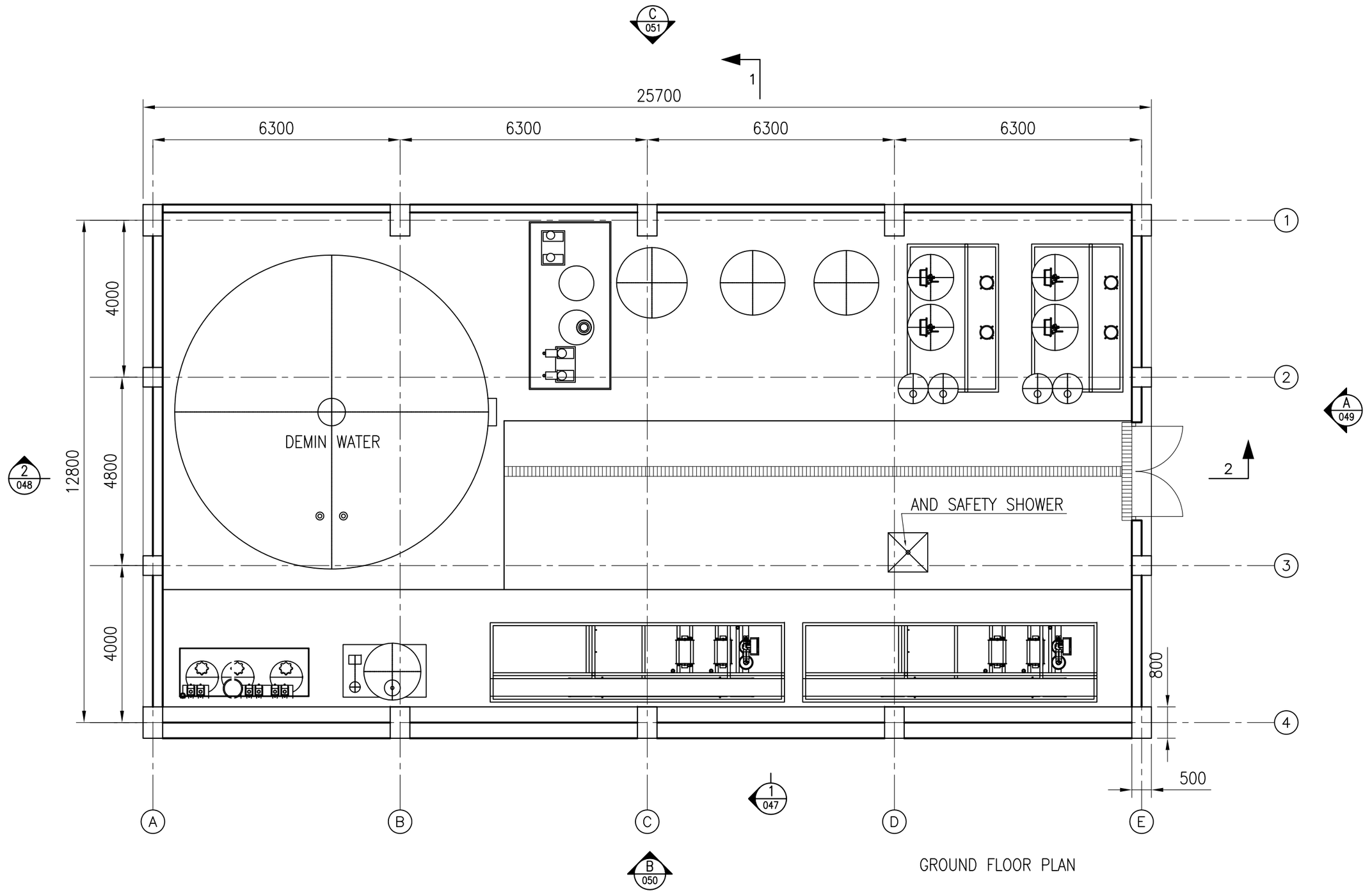

GROUND FLOOR PLAN

0 1 2 3 4 5m

BAR SCALE 1:100

REV.	DESCRIPTION	DATE	DESIGNED BY	CHECKED BY	APPROVED BY	APPROVED BY		
							DESIGNED BY	D.Đ.
							DRAWN BY	A.F.
							CHECHED BY	
							APPROVED BY	
							APPROVED BY	

OFFER N°: 086-EN/15-R2

DATE: 06.2017.

SCALE: 1:100

N°:

EMP./PROJECT.: CNIM/ BELGRADE EFW PLANT

ENERGOPROJEKT ENTEL a.d.

DWG.SUBJECT: **WATER TREATMENT BUILDING GROUND FLOOR PLAN**

DWG N°: **086-EN/15-G045**

SHEET 01 OF 01 REV. 0

FILE NAME: 086-EN-15- WATER TREATMENT - SVE

FORMAT A3 297x420=0,125m²

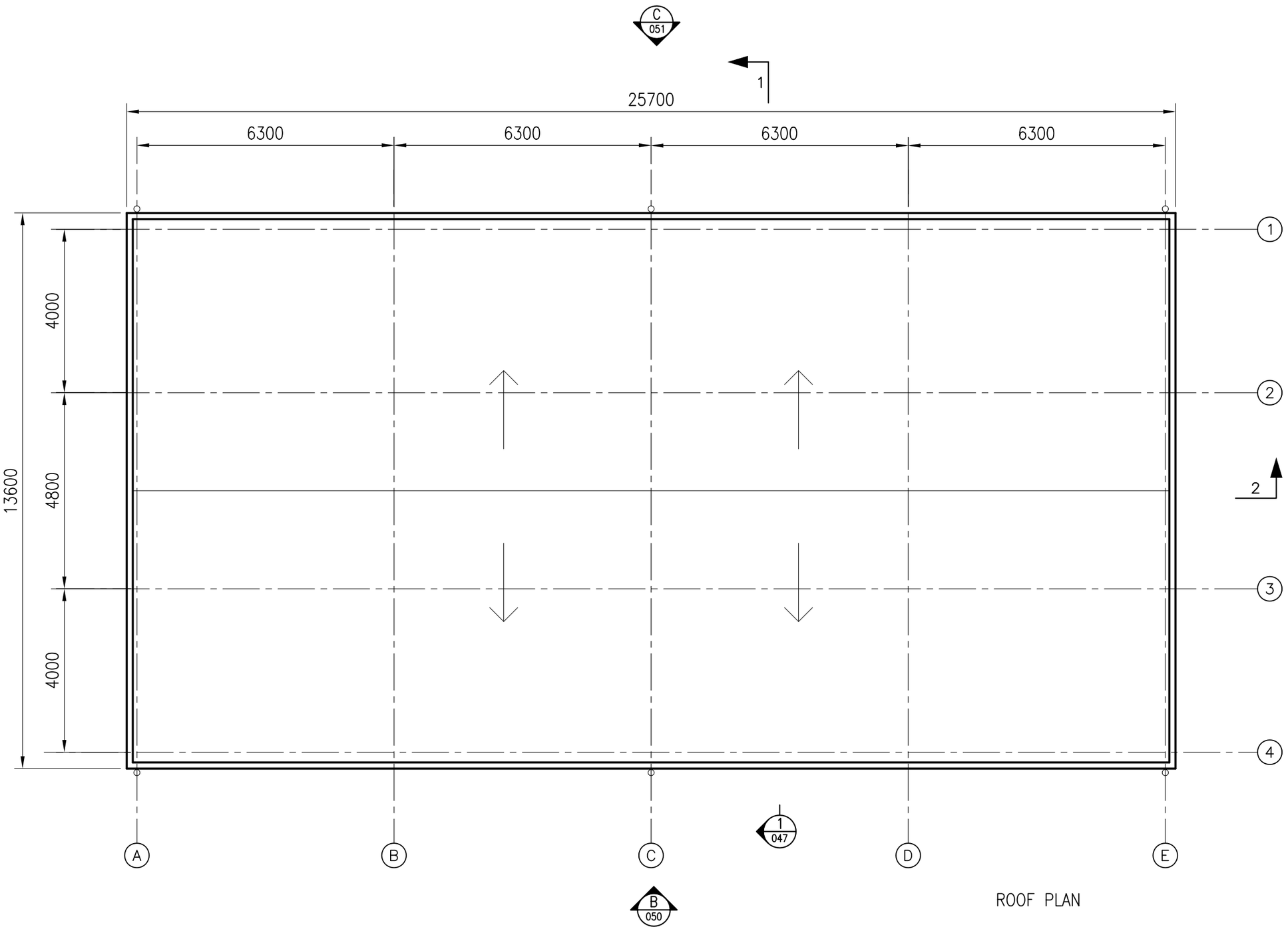

ROOF PLAN

0 1 2 3 4 5m

BAR SCALE 1:100

CNIM

REV.	DESCRIPTION	DATE	DESIGNED BY	CHECKED BY	APPROVED BY	APPROVED BY	APPROVED BY

DESIGNED BY	D.Đ.
DRAWN BY	A.F.
CHECHED BY	
APPROVED BY	
N°:	

OFFER N°: 086-EN/15-R2

DATE: 06.2017.

SCALE: 1:100

EMP./PROJECT.:
CNIM/
BELGRADE EFW PLANT

ENERGOPROJEKT ENTEL a.d.

DWG.SUBJECT:
WATER TREATMENT BUILDING
ROOF PLAN

DWG N°: **086-EN/15-G046**

SHEET 01 OF 01 REV. 0

FILE NAME: 086-EN-15- WATER TREATMENT - SVE

FORMAT A3 297x420=0,125m²

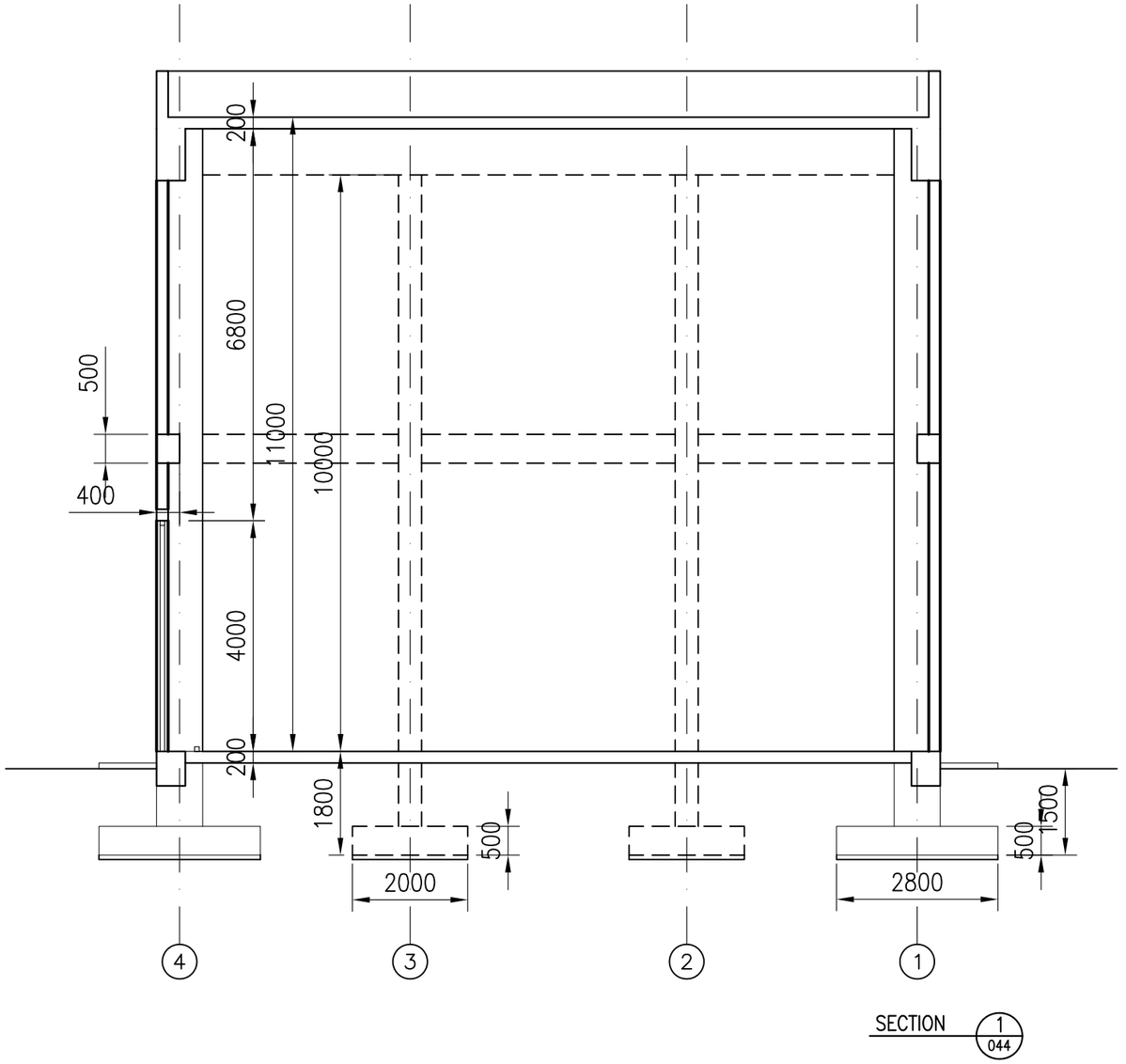

SECTION 1 / 044

0 1 2 3 4 5m

BAR SCALE 1:100

FORMAT A3 297x420=0,125m²

FILE NAME: 086-EN-15- WATER TREATMENT - SVE

REV.	DESCRIPTION	DATE	DESIGNED BY	CHECKED BY	APPROVED BY	APPROVED BY	APPROVED BY

DESIGNED BY	D.Đ.
DRAWN BY	A.F.
CHECHED BY	
APPROVED BY	
N°:	

OFFER N°: 086-EN/15-R2

DATE: 06.2017.

SCALE: 1:100

EMP./PROJECT.:
CNIM/
BELGRADE EFW PLANT

ENERGOPROJEKT ENTEL a.d.

DWG.SUBJECT:
WATER TREATMENT BUILDING
SECTION 1 - 1

DWG N°: **086-EN/15-G047**

SHEET 01 OF 01 REV. 0

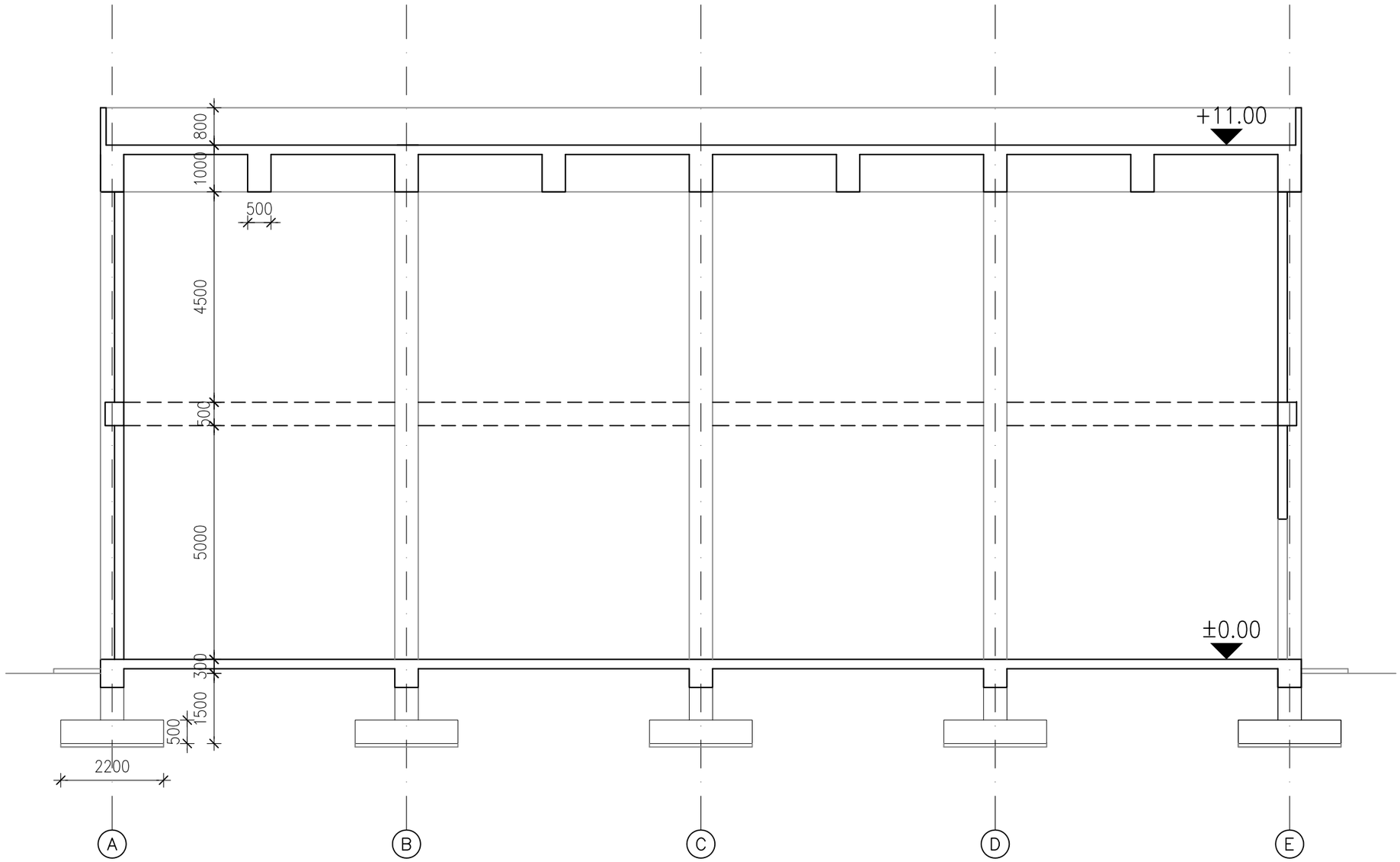

SECTION 2 / 044

0 1 2 3 4 5m

BAR SCALE 1:100

CNIM

							DESIGNED BY	D.Đ.	OFFER N°: 086-EN/15-R2	EMP./PROJECT.: CNIM/ BELGRADE EFW PLANT
							DRAWN BY	A.F.		
							CHECHED BY		DATE: 06.2017.	ENERGOPROJEKT ENTEL a.d.
							APPROVED BY		SCALE: 1:100	
REV.	DESCRIPTION	DATE	DESIGNED BY	CHECKED BY	APPROVED BY	APPROVED BY	APPROVED BY		N°:	

DWG.SUBJECT: **WATER TREATMENT BUILDING SECTION 2 - 2**

DWG N°: **086-EN/15-G048**

SHEET 01 OF 01 REV. 0

FILE NAME: 086-EN-15- WATER TREATMENT - SVE

FORMAT A3 297x420=0,125m²

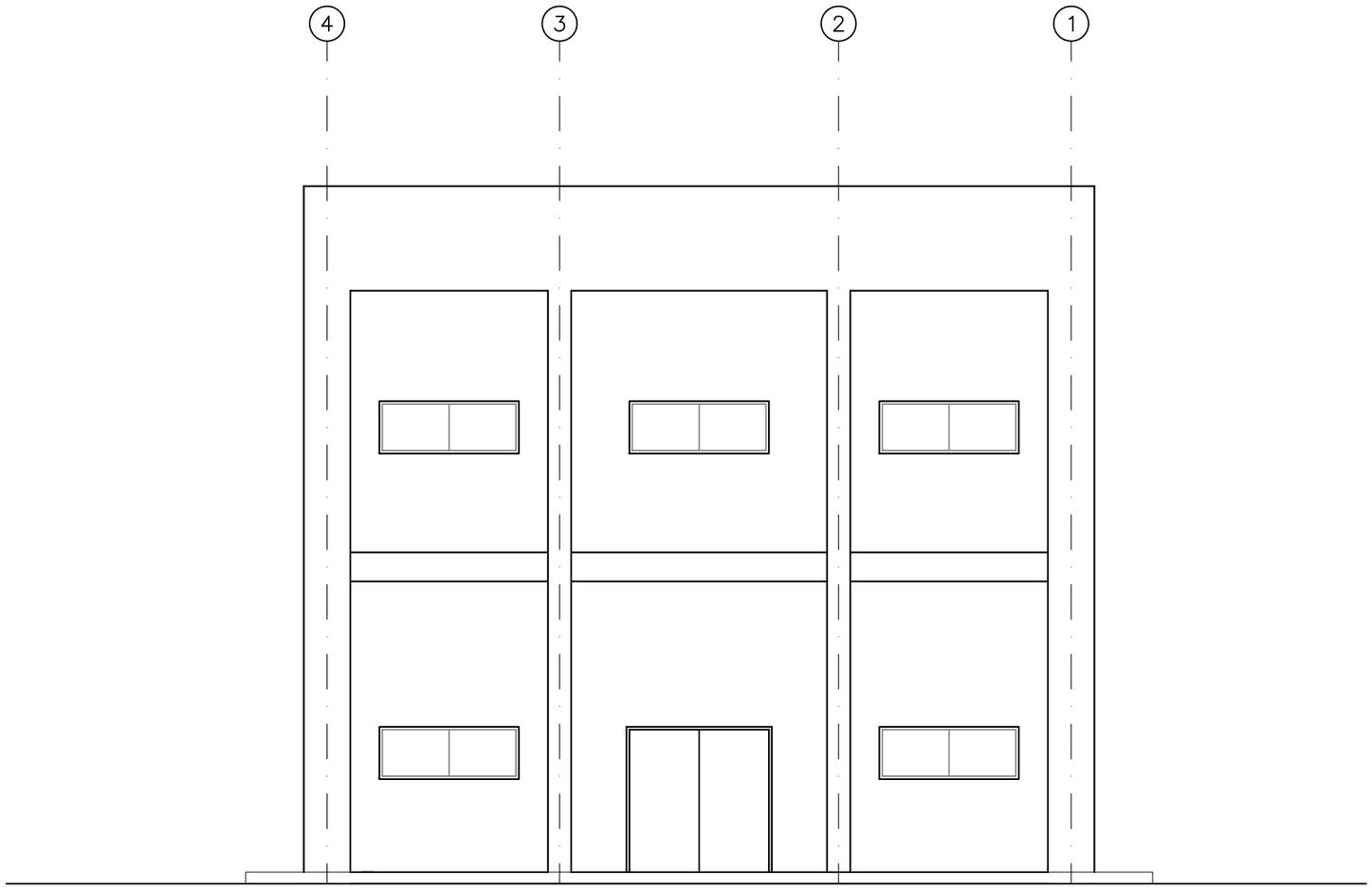

ELEVATION A
044

0 1 2 3 4 5m
BAR SCALE 1:100

CNIM

FORMAT A3 297x420=0,125m²

FILE NAME: 086-EN-15- WATER TREATMENT - SVE

REV.	DESCRIPTION	DATE	DESIGNED BY	CHECKED BY	APPROVED BY	APPROVED BY

DESIGNED BY	D.Đ.
DRAWN BY	A.F.
CHECHED BY	
APPROVED BY	
APPROVED BY	

OFFER N°: 086-EN/15-R2
DATE: 06.2017.
SCALE: 1:100
N°:

EMP./PROJECT.:
CNIM/
BELGRADE EFW PLANT

ENERGOPROJEKT ENTEL a.d.

DWG.SUBJECT:
WATER TREATMENT BUILDING
ELEVATION A

DWG N°: **086-EN/15-G049**

SHEET 01 OF 01 REV. 0

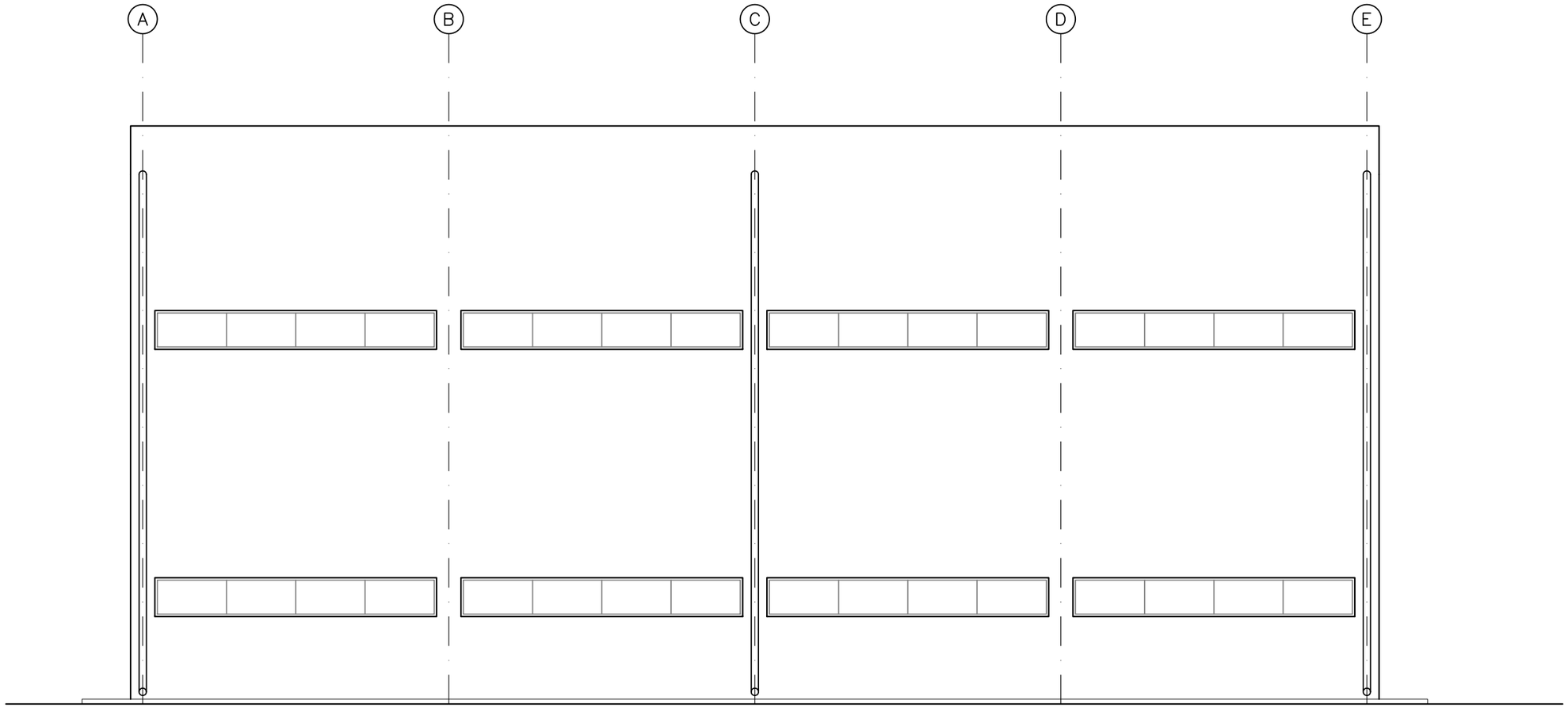

ELEVATION B 044

0 1 2 3 4 5m

BAR SCALE 1:100

FORMAT A3 297x420=0,125m²

FILE NAME: 086-EN-15- WATER TREATMENT - SVE

REV.	DESCRIPTION	DATE	DESIGNED BY	CHECKED BY	APPROVED BY	APPROVED BY	APPROVED BY

DESIGNED BY	D.Đ.
DRAWN BY	A.F.
CHECHED BY	
APPROVED BY	
N°:	

OFFER N°: 086-EN/15-R2

DATE: 06.2017.

SCALE: 1:100

EMP./PROJECT.:
CNIM/
BELGRADE EFW PLANT

ENERGOPROJEKT ENTEL a.d.

DWG.SUBJECT:
WATER TREATMENT BUILDING
ELEVATION B

DWG N°: **086-EN/15-G050**

SHEET 01 OF 01 REV. 0

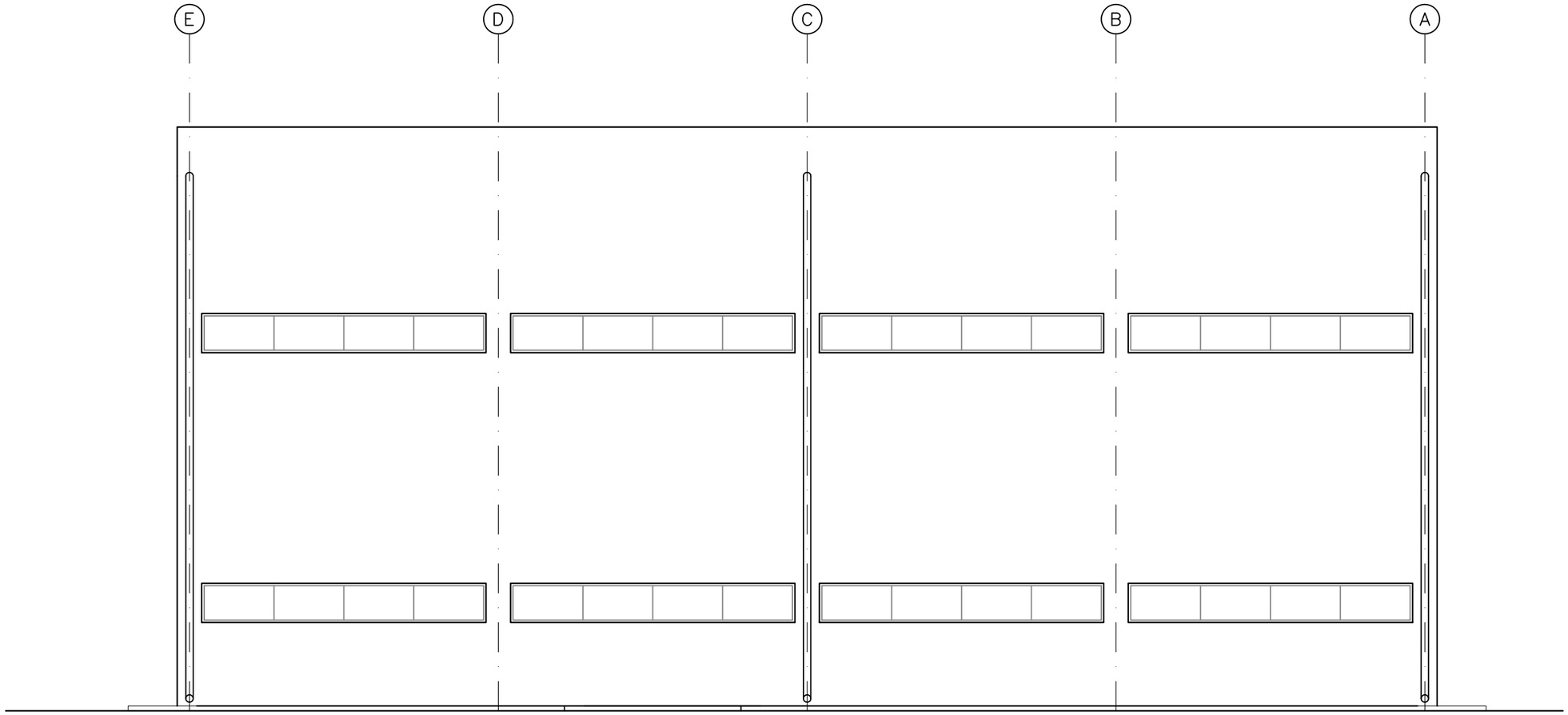

ELEVATION C 044

0 1 2 3 4 5m

BAR SCALE 1:100

CNIM

REV.	DESCRIPTION	DATE	DESIGNED BY	CHECKED BY	APPROVED BY	APPROVED BY

DESIGNED BY	D.Đ.	OFFER N°:	086-EN/15-R2
DRAWN BY	A.F.		
CHECHED BY		DATE:	06.2017.
APPROVED BY		SCALE:	1:100
APPROVED BY		N°:	

EMP./PROJECT.:
CNIM/
BELGRADE EFW PLANT

ENERGOPROJEKT ENTEL a.d.

DWG.SUBJECT:
WATER TREATMENT BUILDING
ELEVATION C

DWG N°: **086-EN/15-G051**

SHEET 01 OF 01 REV. 0

FILE NAME: 086-EN-15- WATER TREATMENT - SVE

FORMAT A3 297x420=0,125m²

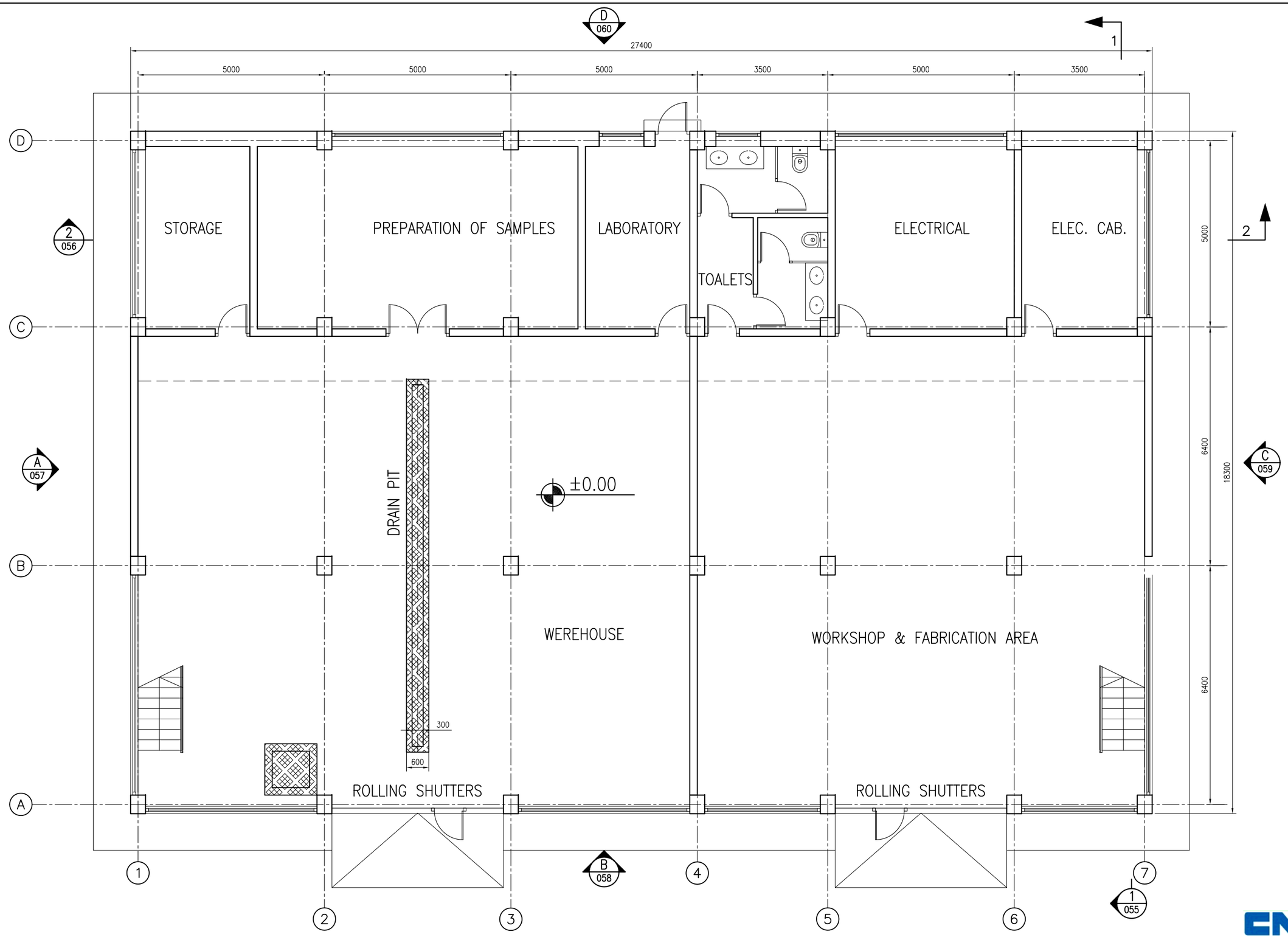

FORMAT A3 297x420=0,125m²

FILE NAME: 086-EN-15-G052

REV.	DESCRIPTION	DATE	DESIGNED BY	CHECKED BY	APPROVED BY	APPROVED BY

DESIGNED BY	D.Đ.
DRAWN BY	A.F.
CHECHED BY	
APPROVED BY	
APPROVED BY	

OFFER N°: 086-EN/15-R2

DATE: 06.2017.

SCALE: 1:100

N°:

EMP./PROJECT.:
CNIM/
BELGRADE EFW PLANT

ENERGOPROJEKT ENTEL a.d.

DWG.SUBJECT:
WORKSHOP BUILDING
GROUND FLOOR PLAN

DWG N°: **086-EN/15-G052**

SHEET 01 OF 01 REV. 0

CNIM

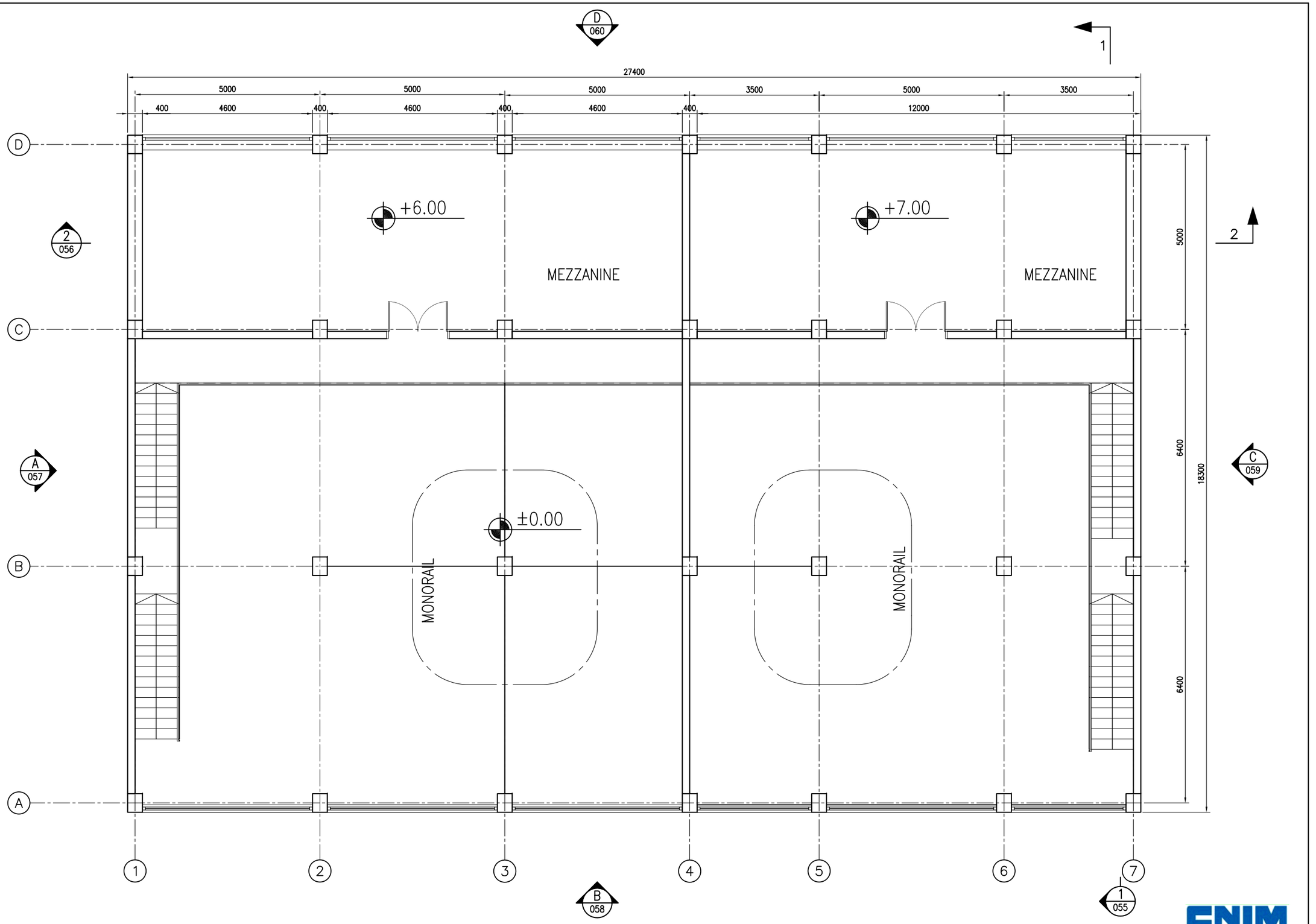

FORMAT A3 297x420=0,125m²

FILE NAME: 086-EN-15-G053-001001-0

REV.	OPIS	DATUM	PROJEKTOVAO	KONTROLISAO	ODOBRIO	ODOBRIO

PROJEKTOVAO	D.DJ.	UGOVOR BROJ: 086-EN/15	INV./OBJ.: CNIM / BELGRADE EFW PLANT
OBRADIO	J.T.		
KONTROLISAO		DATUM: 03.2017.	
ODOBRIO		RAZMERA: 1:100	
ODOBRIO		REDNI BROJ:	

ENERGOPROJEKT ENTEL a.d.

NAZIV: **WORKSHOP BUILDING LEVEL +6.80**

CRTEŽ BROJ: **086-EN/15-G052**

LIST 01 OD 01 REV. 0

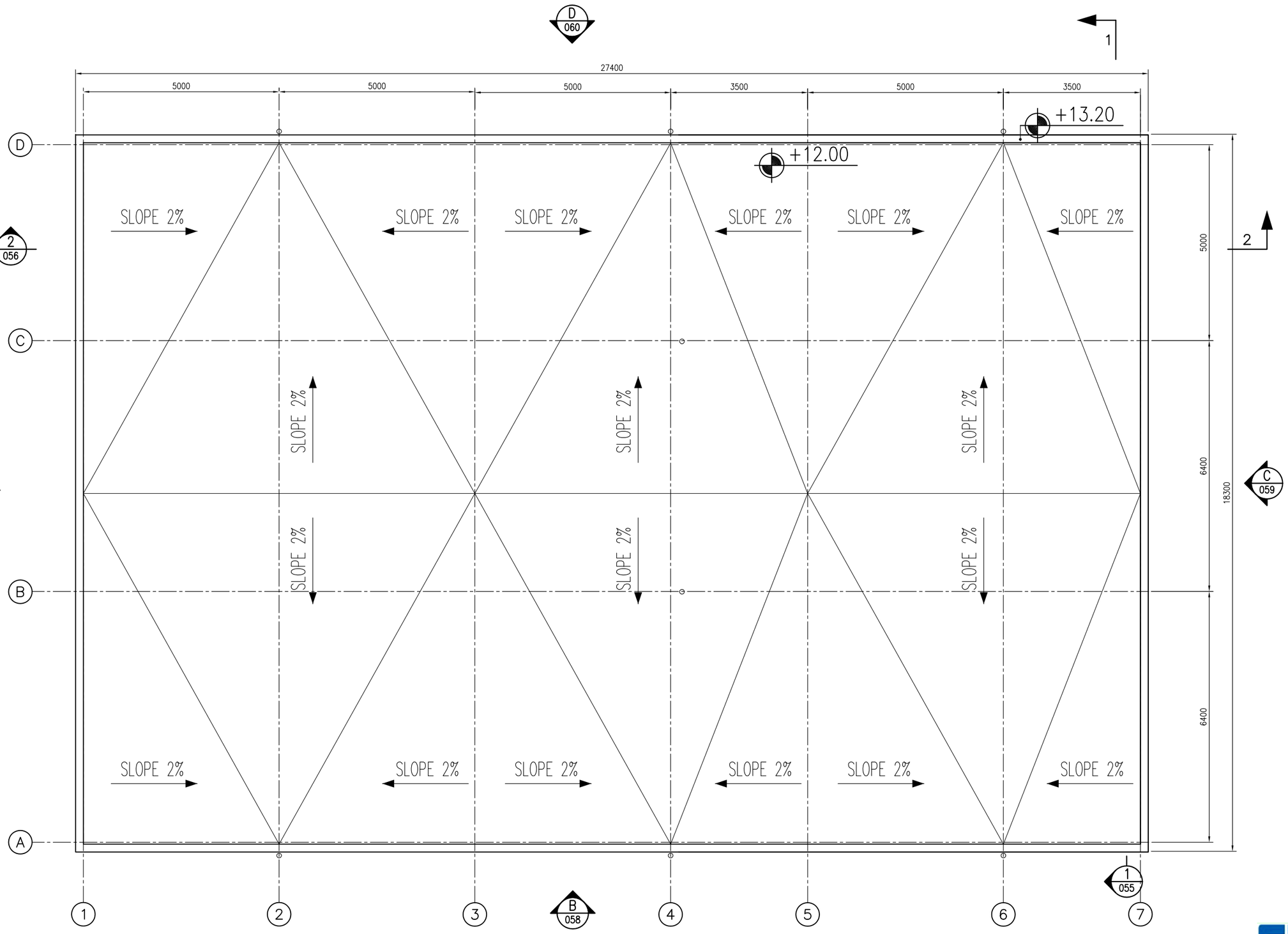

FORMAT A3 297x420=0,125m²

FILE NAME: 086-EN-15-G054

REV.	DESCRIPTION	DATE	DESIGNED BY	CHECKED BY	APPROVED BY	APPROVED BY

DESIGNED BY	D.Đ.
DRAWN BY	A.F.
CHECHED BY	
APPROVED BY	
APPROVED BY	
N°:	

OFFER N°: 086-EN/15-R2

DATE: 06.2017.

SCALE: 1:100

EMP./PROJECT.:
CNIM/
BELGRADE EFW PLANT

ENERGOPROJEKT ENTEL a.d.

DWG.SUBJECT:
WORKSHOP BUILDING
ROOF PLAN

DWG N°: **086-EN/15-G054**

SHEET 01 OF 01 REV. 0

CNIM

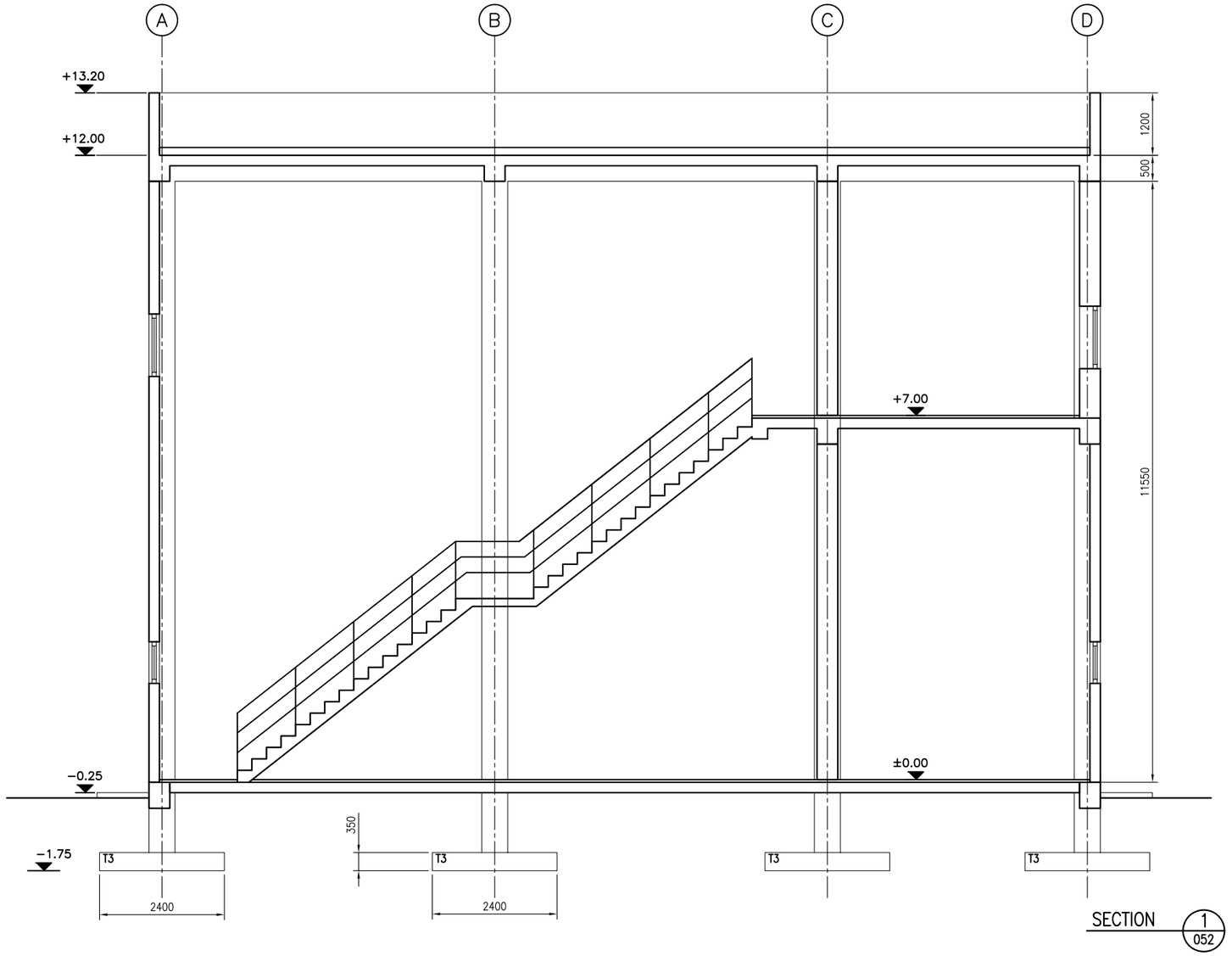

SECTION 1/052

FORMAT A3 297x420=0,125m²

FILE NAME: 086-EN-15-G055

REV.	DESCRIPTION	DATE	DESIGNED BY	CHECKED BY	APPROVED BY	APPROVED BY

DESIGNED BY	D.Đ.
DRAWN BY	A.F.
CHECHED BY	
APPROVED BY	
APPROVED BY	

OFFER N°: 086-EN/15-R2

DATE: 06.2017.

SCALE: 1:100

N°:

EMP./PROJECT.:
CNIM/
BELGRADE EFW PLANT

ENERGOPROJEKT ENTEL a.d.

DWG.SUBJECT:
WORKSHOP BUILDING
SECTION 1-1

DWG N°: **086-EN/15-G055**

SHEET 01 OF 01 REV. 0

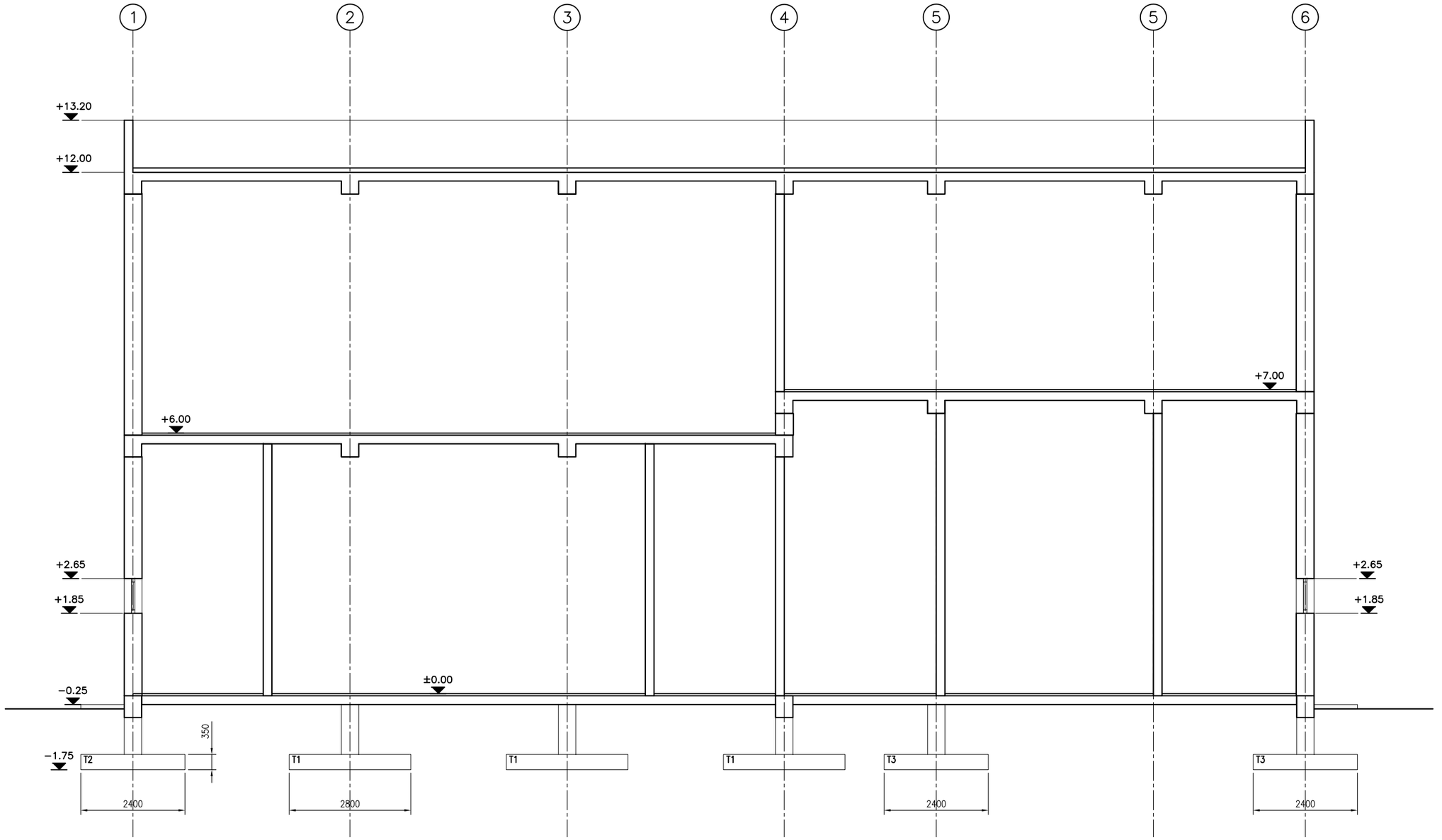

SECTION 2 / 056

CNIM

FORMAT A3 297x420=0,125m²

FILE NAME: 086-EN-15-G056

REV.	DESCRIPTION	DATE	DESIGNED BY	CHECKED BY	APPROVED BY	APPROVED BY

DESIGNED BY	D.Đ.
DRAWN BY	A.F.
CHECHED BY	
APPROVED BY	
APPROVED BY	

OFFER N°: 086-EN/15-R2

DATE: 06.2017.

SCALE: 1:100

N°:

EMP./PROJECT.:
CNIM/
BELGRADE EFW PLANT

ENERGOPROJEKT ENTEL a.d.

DWG.SUBJECT:
WORKSHOP BUILDING
SECTION 2-2

DWG N°: **086-EN/15-G056**

SHEET 01 OF 01 REV. 0

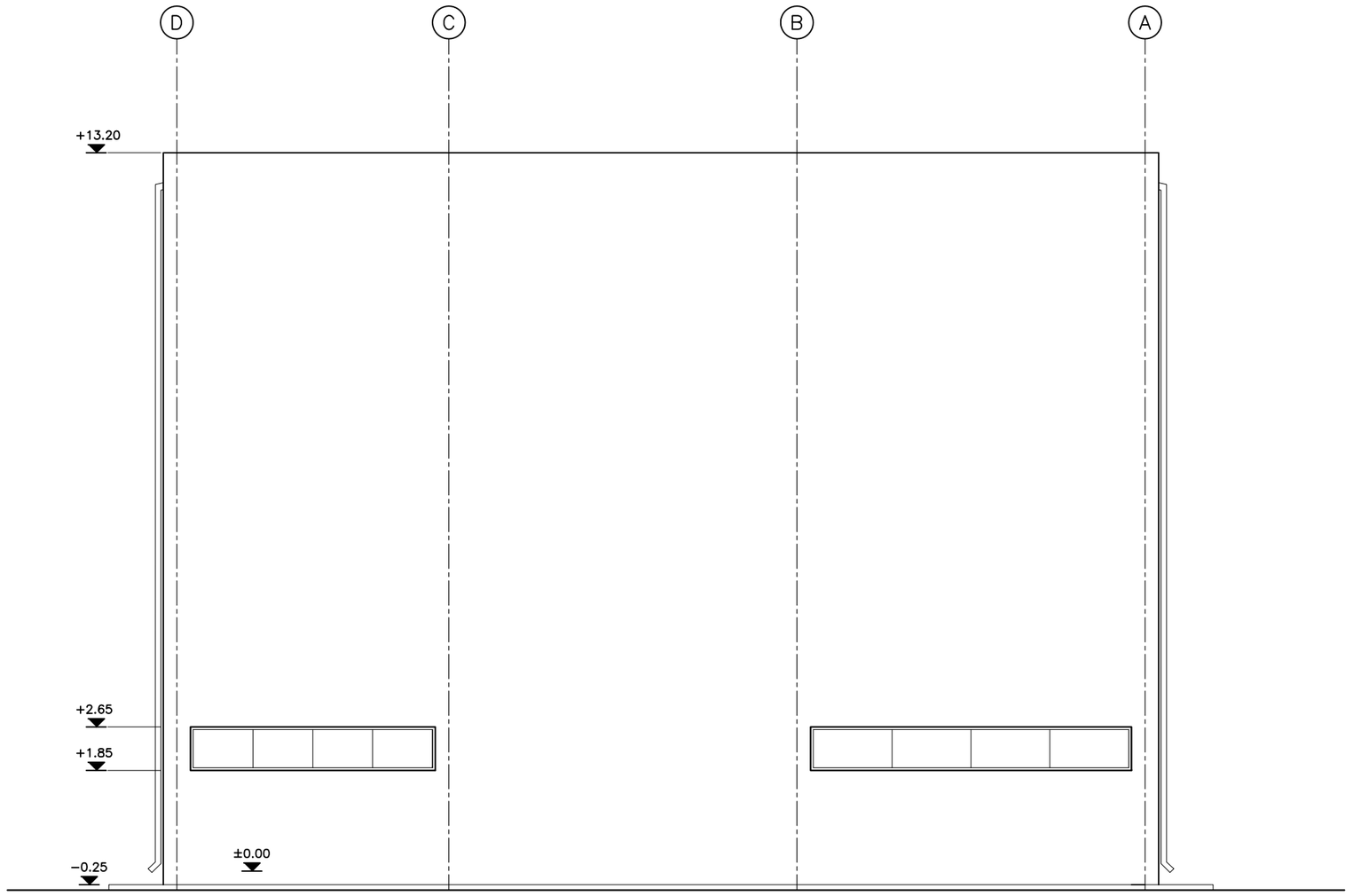

ELEVATION A 052

CNIM

REV.	DESCRIPTION	DATE	DESIGNED BY	CHECKED BY	APPROVED BY	APPROVED BY

DESIGNED BY	D.Đ.	OFFER N°: 086-EN/15-R2	EMP./PROJECT.: CNIM/ BELGRADE EFW PLANT
DRAWN BY	A.F.		
CHECHED BY		DATE: 06.2017.	ENERGOPROJEKT ENTEL a.d.
APPROVED BY		SCALE: 1:100	DWG N°: 086-EN/15-G057
APPROVED BY		N°:	SHEET 01 OF 01 REV. 0

DWG.SUBJECT: WORKSHOP BUILDING ELEVATION A

FILE NAME: 086-EN-15-G057

FORMAT A3 297x420=0,125m²

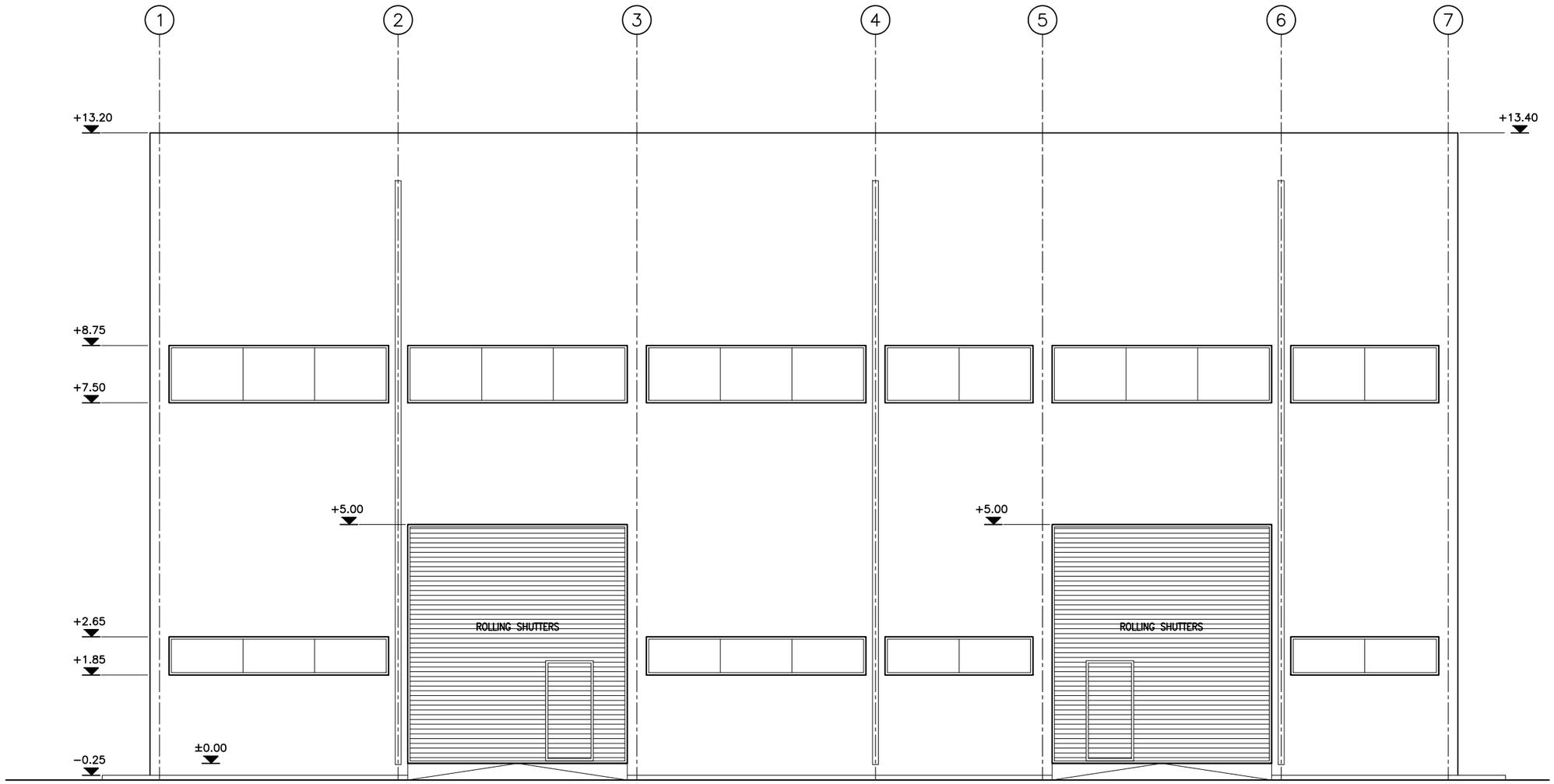

ELEVATION B / 052

FORMAT A3 297x420=0,125m²

FILE NAME: 086-EN-15-G058

REV.	DESCRIPTION	DATE	DESIGNED BY	CHECKED BY	APPROVED BY	APPROVED BY

DESIGNED BY	D.Đ.
DRAWN BY	A.F.
CHECHED BY	
APPROVED BY	
APPROVED BY	

OFFER N°: 086-EN/15-R2

DATE: 06.2017.

SCALE: 1:100

N°:

EMP./PROJECT.: **CNIM/ BELGRADE EFW PLANT**

ENERGOPROJEKT ENTEL a.d.

DWG.SUBJECT: **WORKSHOP BUILDING ELEVATION B**

DWG N°: **086-EN/15-G058**

SHEET 01 OF 01 REV. 0

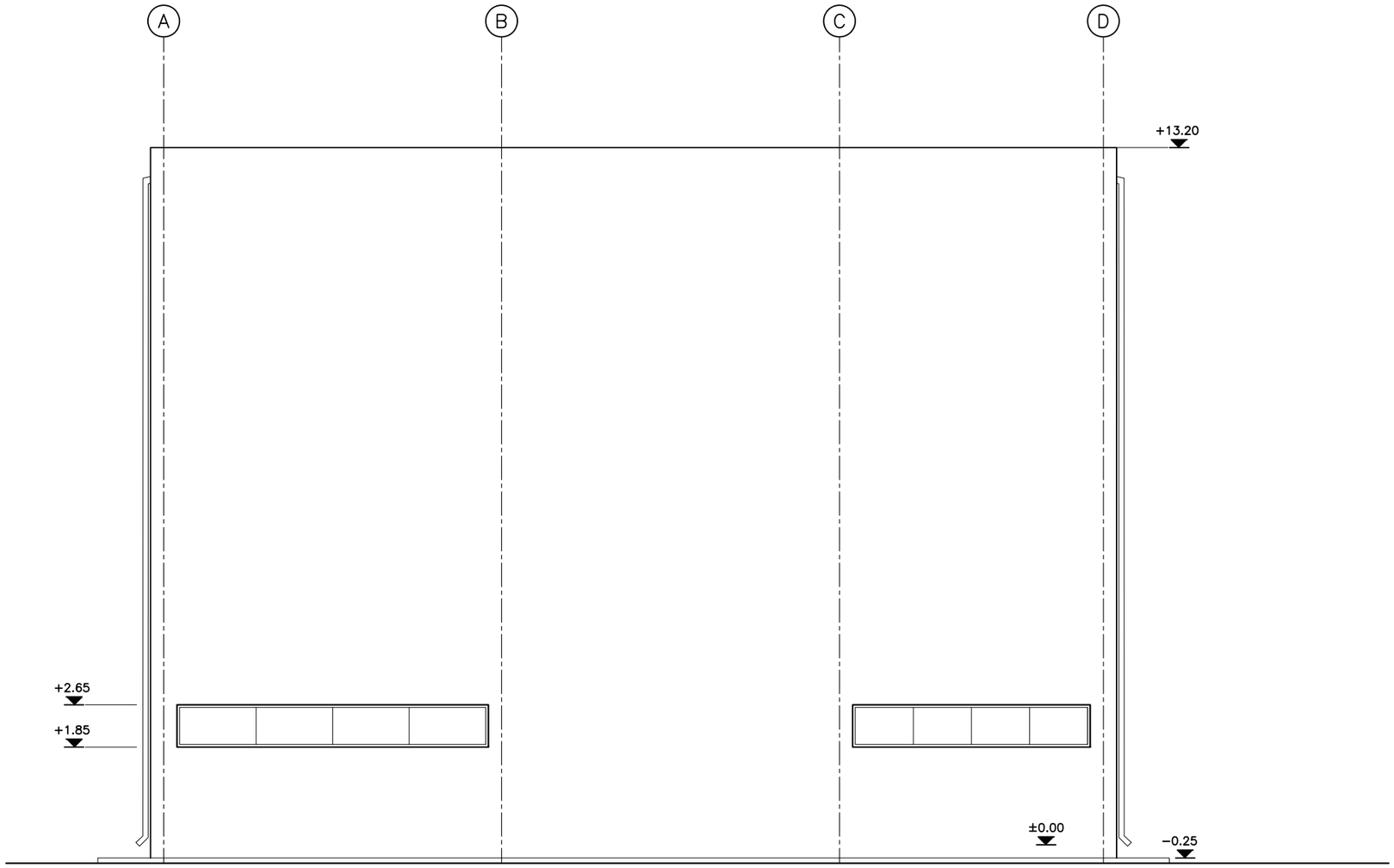

ELEVATION C/059

CNIM

REV.	DESCRIPTION	DATE	DESIGNED BY	CHECKED BY	APPROVED BY	APPROVED BY

DESIGNED BY	D.Đ.
DRAWN BY	A.F.
CHECHED BY	
APPROVED BY	
APPROVED BY	

OFFER N°:	086-EN/15-R2
DATE:	06.2017.
SCALE:	1:100
N°:	

EMP./PROJECT.:
CNIM/ BELGRADE EFW PLANT

ENERGOPROJEKT ENTEL a.d.

DWG.SUBJECT:
WORKSHOP BUILDING ELEVATION C

DWG N°: **086-EN/15-G059**

SHEET 01 OF 01 REV. 0

FILE NAME: 086-EN-15-G059

FORMAT A3 297x420=0,125m²

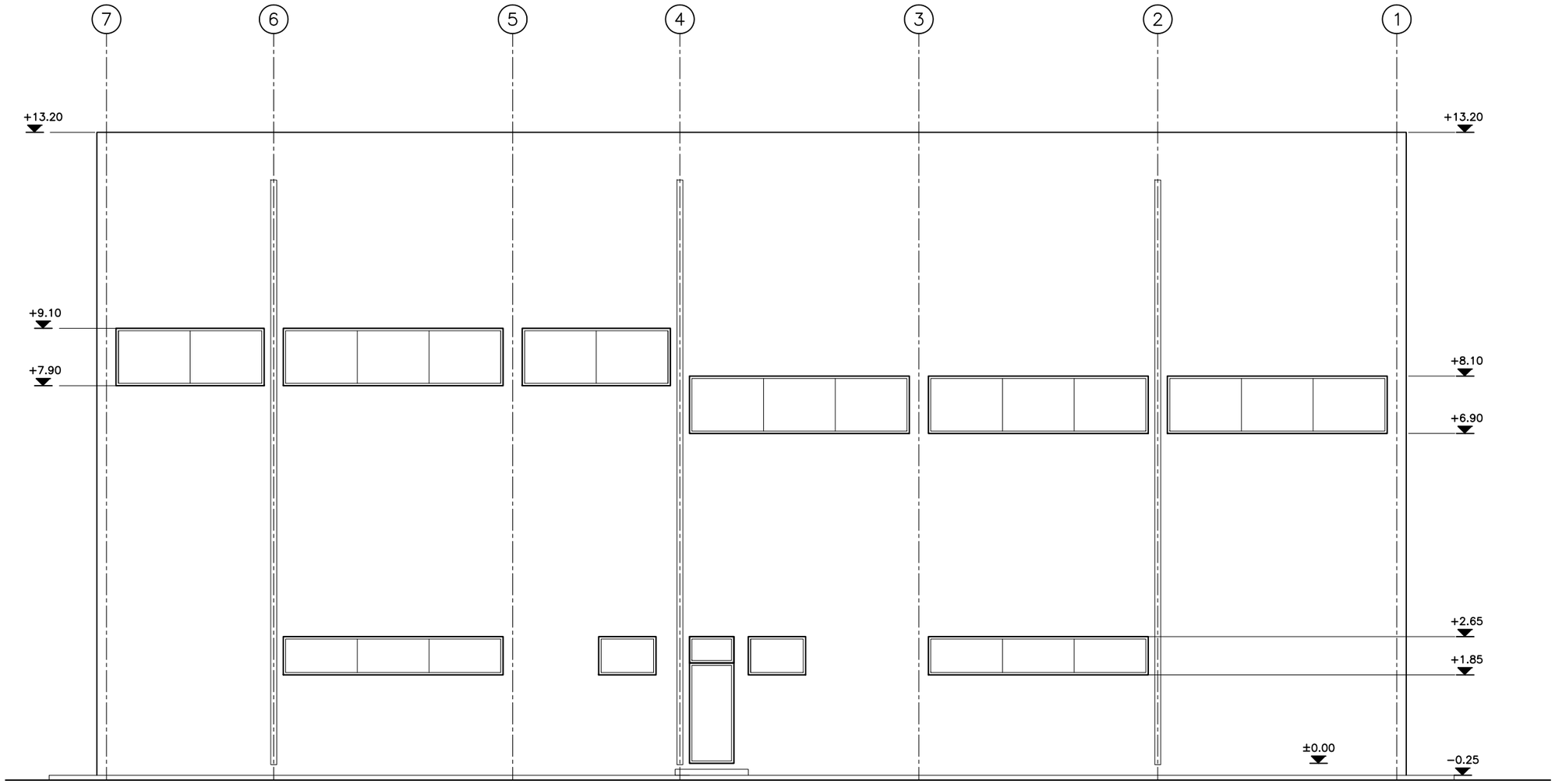

ELEVATION D 060

CNIM

FORMAT A3 297x420=0,125m²

FILE NAME: 086-EN-15-G060

REV.	DESCRIPTION	DATE	DESIGNED BY	CHECKED BY	APPROVED BY	APPROVED BY

DESIGNED BY	D.Đ.
DRAWN BY	A.F.
CHECHED BY	
APPROVED BY	
APPROVED BY	

OFFER N°: 086-EN/15-R2

DATE: 06.2017.

SCALE: 1:100

N°:

EMP./PROJECT.: CNIM/ BELGRADE EFW PLANT

ENERGOPROJEKT ENTEL a.d.

DWG.SUBJECT: WORKSHOP BUILDING ELEVATION D

DWG N°: 086-EN/15-G060

SHEET 01 OF 01 REV. 0

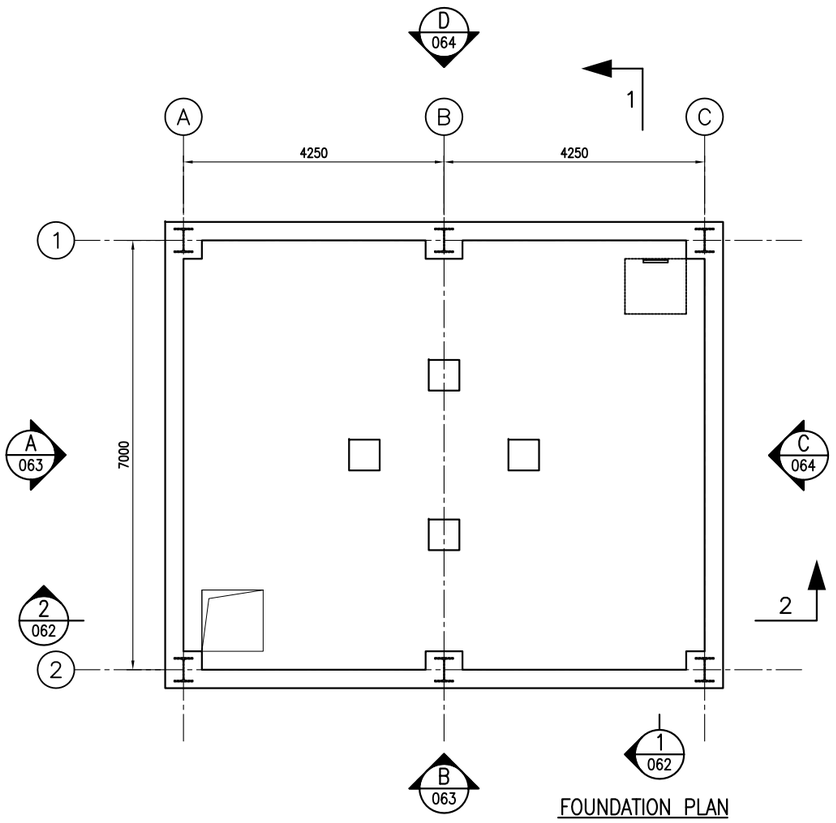

FOUNDATION PLAN

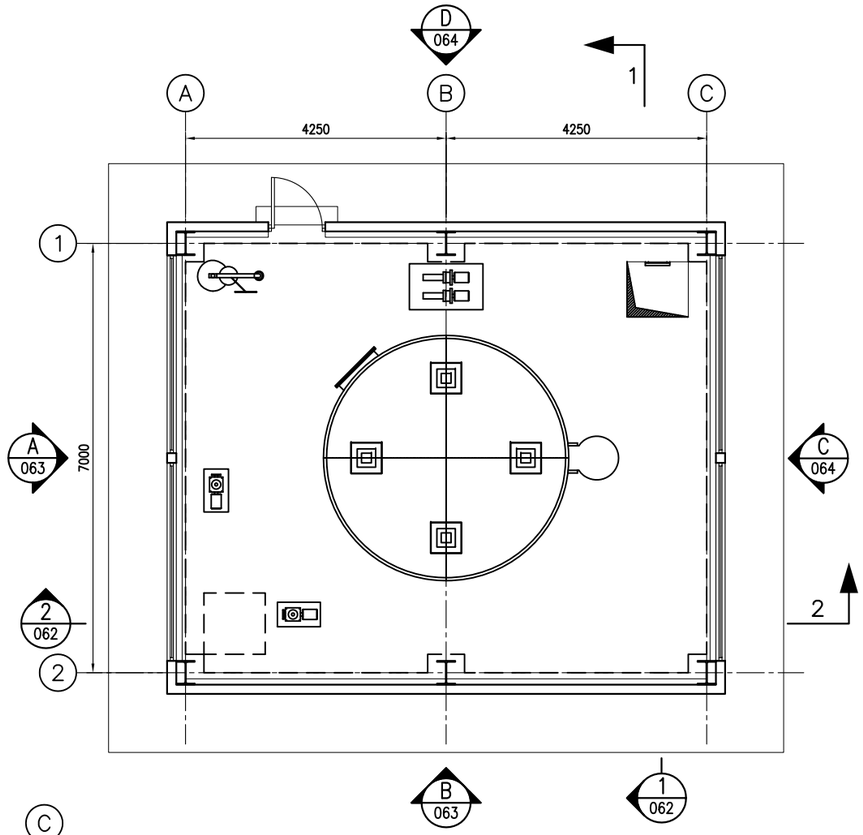

GROUND FLOOR PLAN

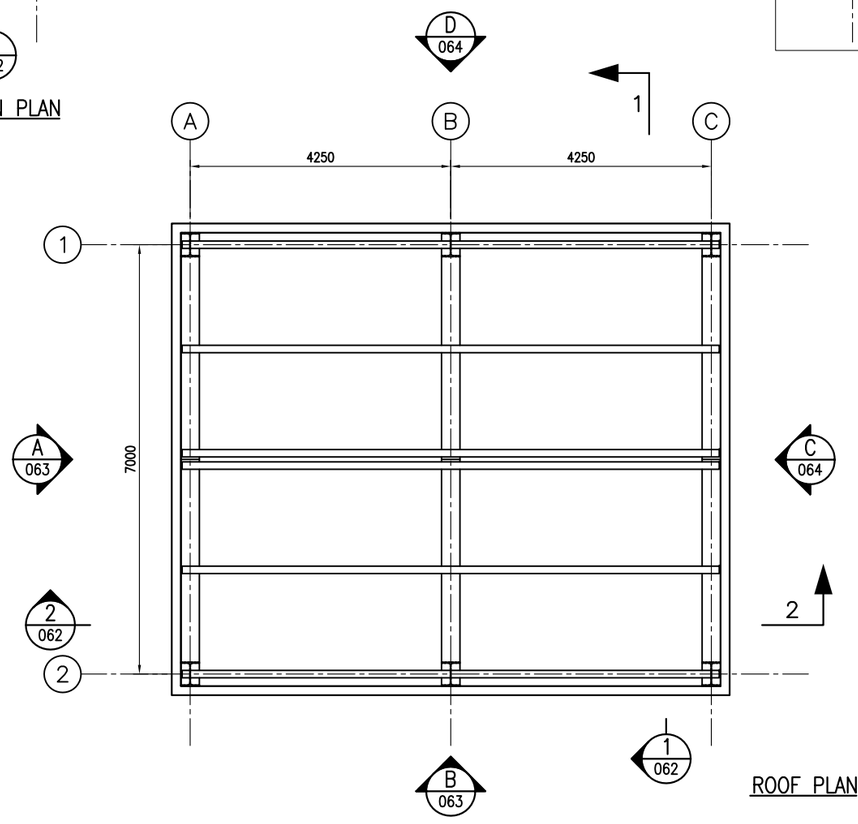

ROOF PLAN

0 1 2 3 4 5m

BAR SCALE 1:100

FORMAT A3 297x420=0,125m²

FILE NAME: 086-EN-15-G063-001001-0

REV.	DESCRIPTION	DATE	DESIGNED BY	CHECKED BY	APPROVED BY	APPROVED BY

DESIGNED BY	D.Đ.	OFFER N°: 086-EN/15-R2	EMP./PROJECT.: CNIM/ BELGRADE EFW PLANT
DRAWN BY	A.F.		
CHECHED BY		DATE: 06.2017.	
APPROVED BY		SCALE: 1:100	
APPROVED BY		N°:	

ENERGOPROJEKT ENTEL a.d.

DWG.SUBJECT:

SNCR DENOX BUILDING

Foundation plan, Ground floor plan, Roof plan

DWG N°: **086-EN/15-G061**

SHEET 01 OF 01 REV. 0

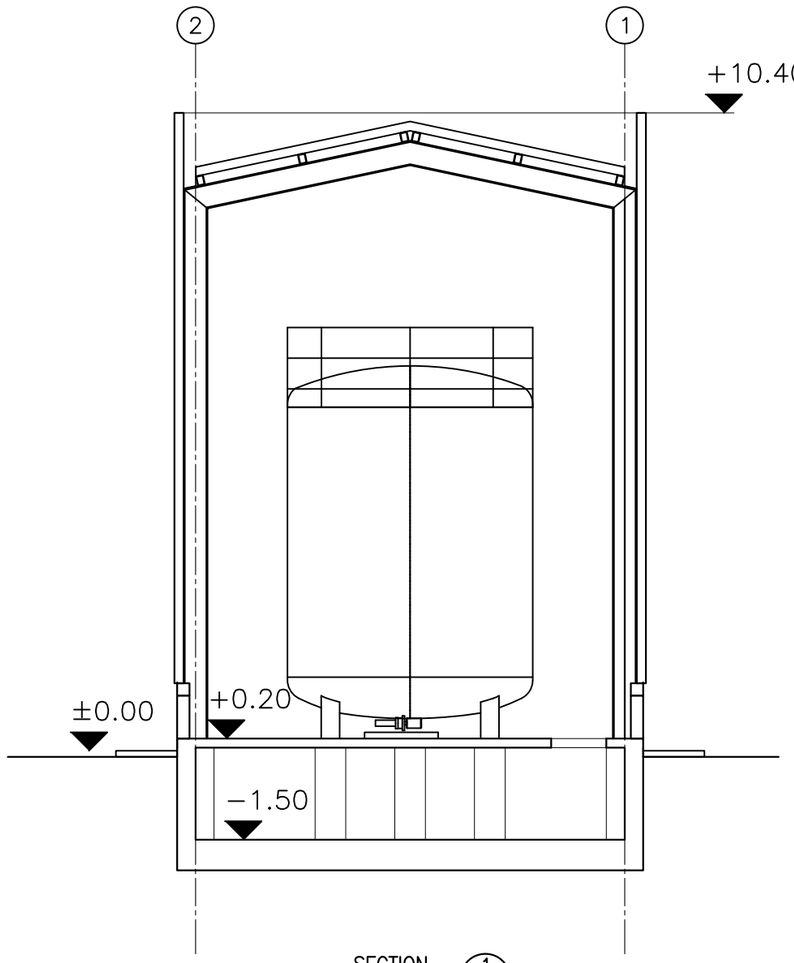

SECTION 1/061

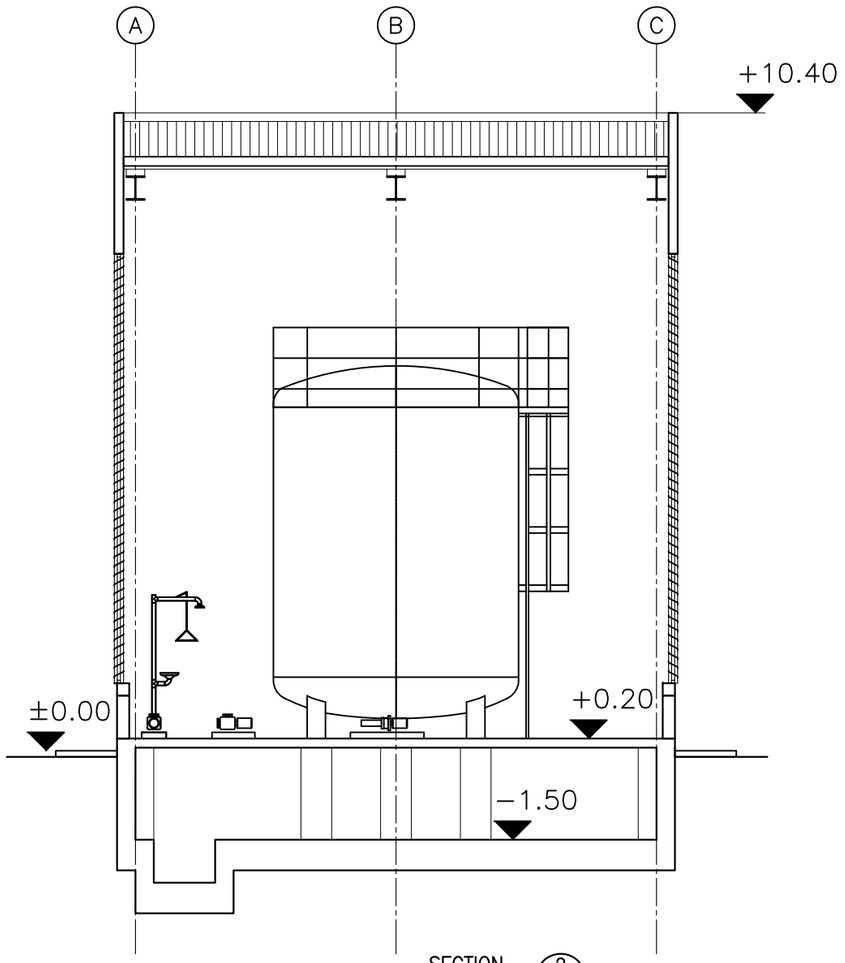

SECTION 2/061

CNIM

0 1 2 3 4 5m

BAR SCALE 1:100

FORMAT A3 297x420=0,125m²

FILE NAME: 086-EN-15-G063-001001-0

REV.	DESCRIPTION	DATE	DESIGNED BY	CHECKED BY	APPROVED BY	APPROVED BY

DESIGNED BY	D.Đ.	OFFER N°: 086-EN/15-R2	EMP./PROJECT.: CNIM/ BELGRADE EFW PLANT
DRAWN BY	A.F.		
CHECHED BY		DATE: 06.2017.	ENERGOPROJEKT ENTEL a.d.
APPROVED BY		SCALE: 1:100	
APPROVED BY		N°:	

DWG.SUBJECT: **SNCR DENOX BUILDING FIRST FLOOR**

DWG N°: **086-EN/15-G062**

SHEET 01 OF 01 REV. 0

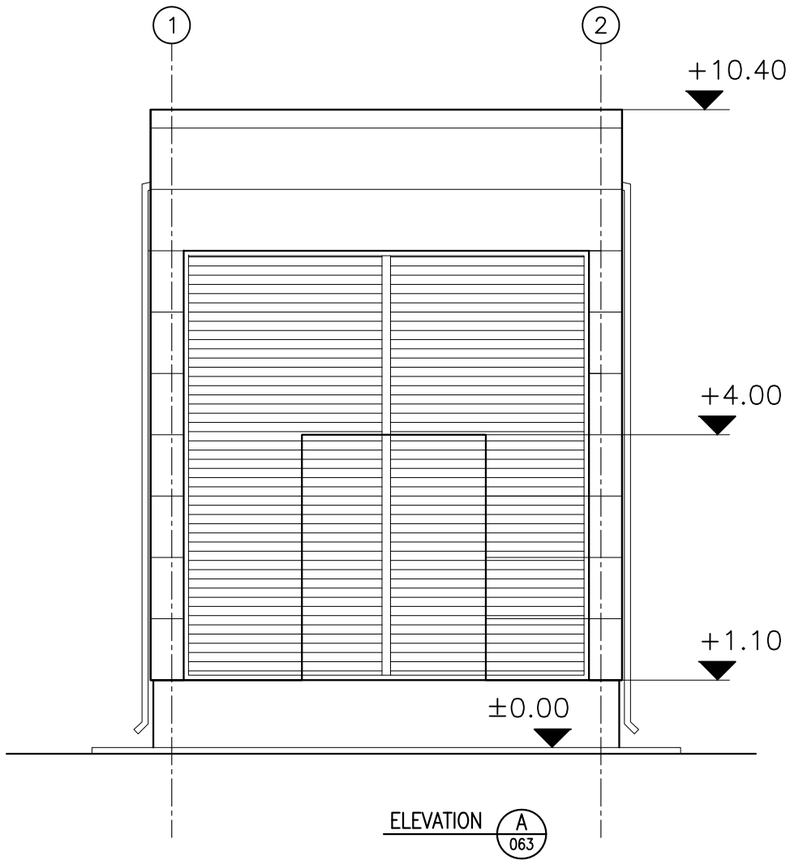

ELEVATION A 063

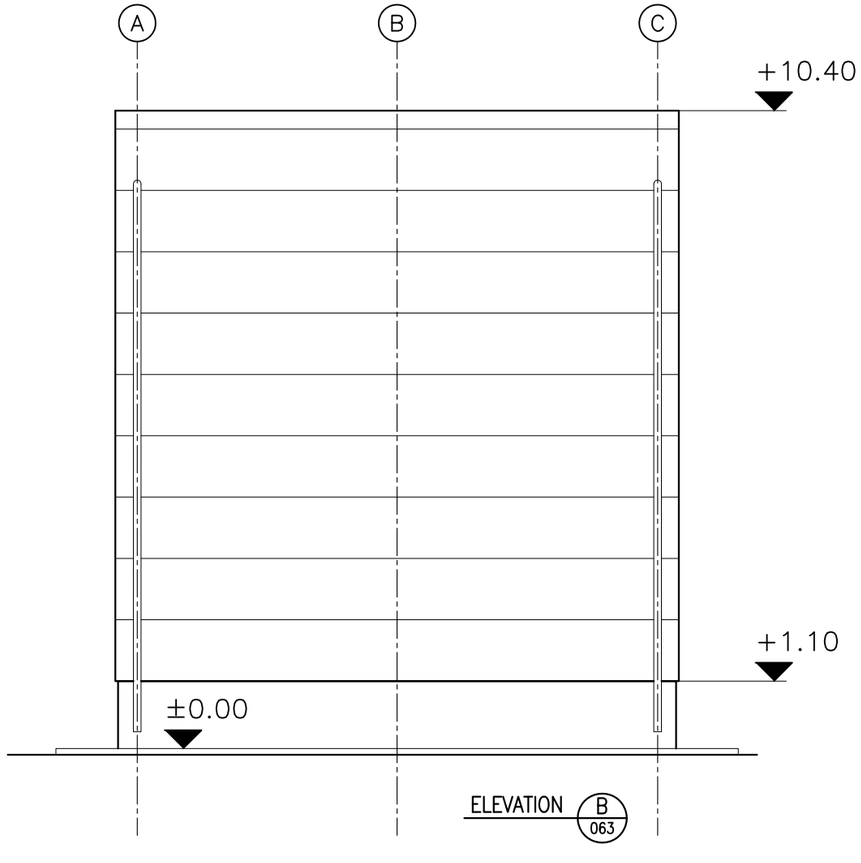

ELEVATION B 063

SECTION 1 061

SECTION 2 061

0 1 2 3 4 5m

BAR SCALE 1:100

CNIM

FORMAT A3 297x420=0,125m²

FILE NAME: 086-EN-15-G063-001001-0

REV.	DESCRIPTION	DATE	DESIGNED BY	CHECKED BY	APPROVED BY	APPROVED BY	APPROVED BY

DESIGNED BY	D.Đ.
DRAWN BY	A.F.
CHECHED BY	
APPROVED BY	
N°:	

OFFER N°: 086-EN/15-R2

DATE: 06.2017.

SCALE: 1:100

EMP./PROJECT.:
CNIM/
BELGRADE EFW PLANT

ENERGOPROJEKT ENTEL a.d.

DWG.SUBJECT:
SNCR DENOX BUILDING
FIRST FLOOR

DWG N°: **086-EN/15-G063**

SHEET 01 OF 01 REV. 0

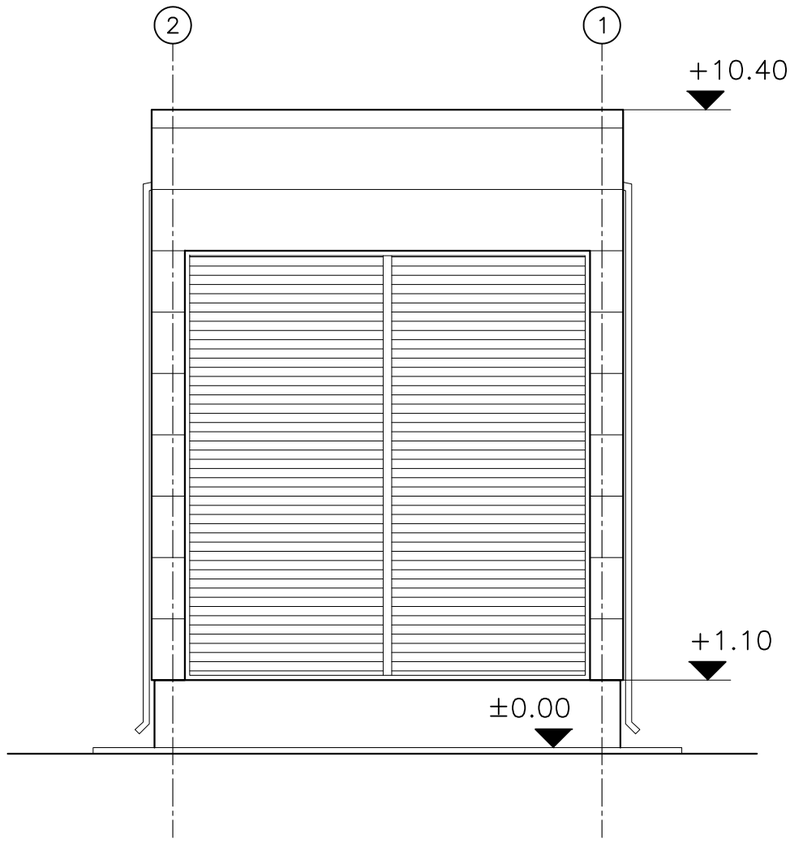

ELEVATION C 061

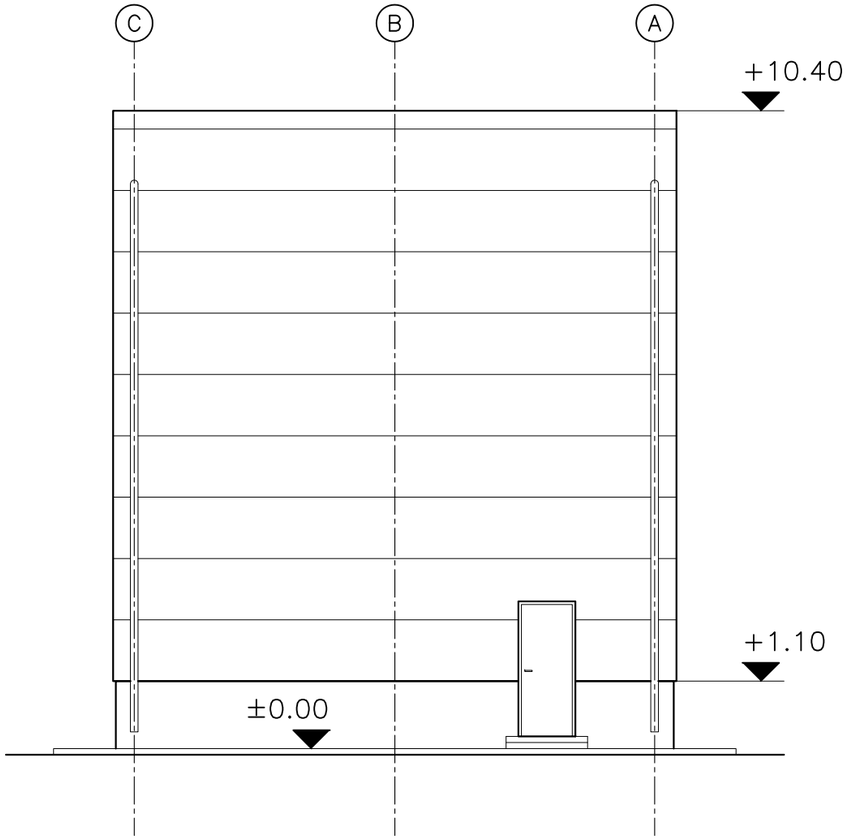

ELEVATION D 061

FORMAT A3 297x420=0,125m²

FILE NAME: 086-EN-15-G063-001001-0

CNIM

0 1 2 3 4 5m
BAR SCALE 1:100

REV.	DESCRIPTION	DATE	DESIGNED BY	CHECKED BY	APPROVED BY	APPROVED BY

DESIGNED BY	D.Đ.
DRAWN BY	A.F.
CHECHED BY	
APPROVED BY	
APPROVED BY	

OFFER N°: 086-EN/15-R2

DATE: 06.2017.

SCALE: 1:100

N°:

EMP./PROJECT.:
CNIM/
BELGRADE EFW PLANT

ENERGOPROJEKT ENTEL a.d.

DWG.SUBJECT:
SNCR DENOX BUILDING
FIRST FLOOR

DWG N°: **086-EN/15-G064**

SHEET 01 OF 01 REV. 0

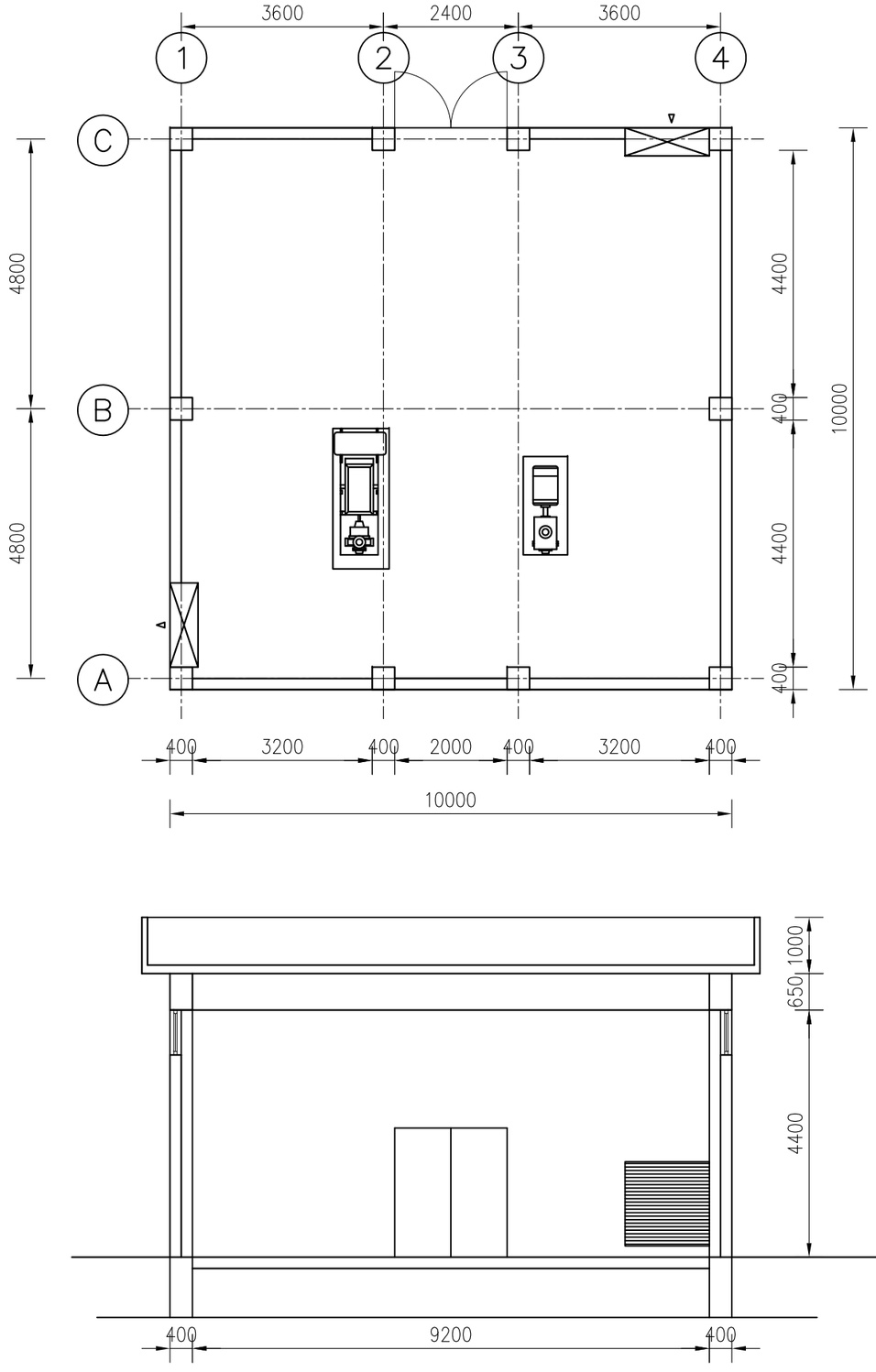

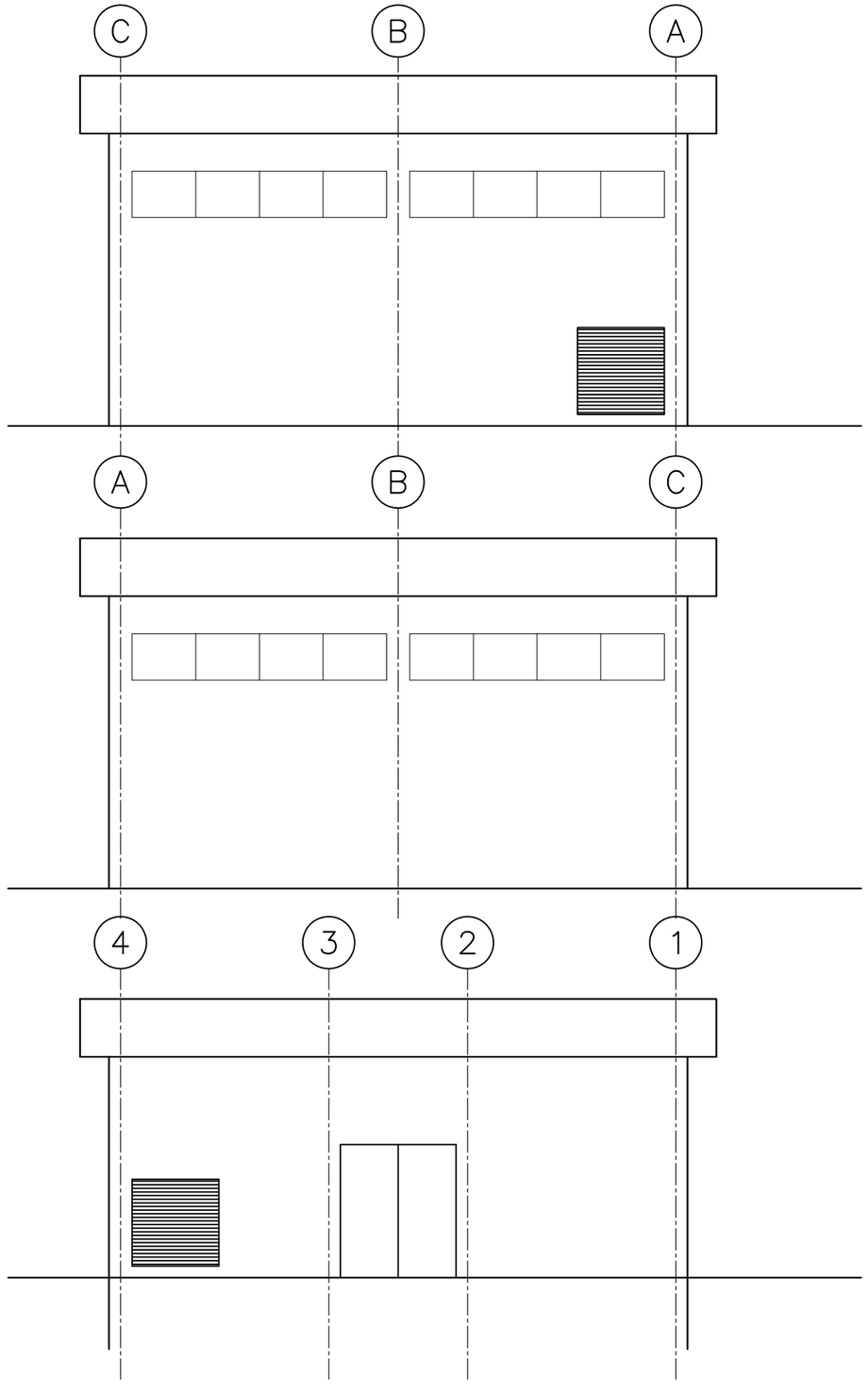

FORMAT A3 297x420=0,125m²

FILE NAME: FIRE WATER PUMP HOUSE

REV.	DESCRIPTION	DATE	DESIGNED BY	CHECKED BY	APPROVED BY	APPROVED BY

DESIGNED BY	D.Đ.
DRAWN BY	A.F.
CHECHED BY	
APPROVED BY	
APPROVED BY	

OFFER N°: 086-EN/15-R2

DATE: 06.2017.

SCALE: 1:100

N°:

EMP./PROJECT.:
CNIM/
BELGRADE EFW PLANT

ENERGOPROJEKT ENTEL a.d.

DWG.SUBJECT:
FIRE WATER PUMP HOUSE
Ground floor plan, Section 1-1, Elevation A, B and C

DWG N°: **086-EN/15-G065**

SHEET 01 OF 01 REV. 0

CNIM

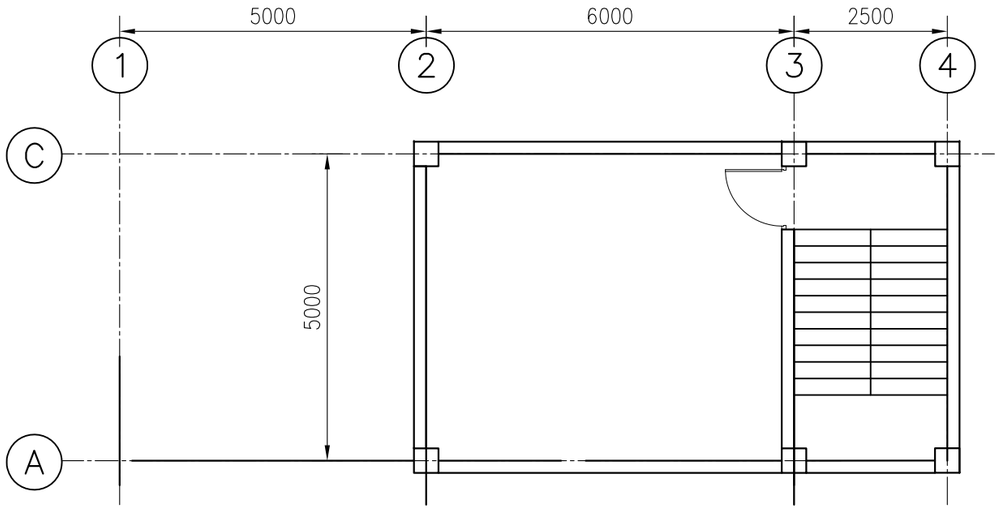

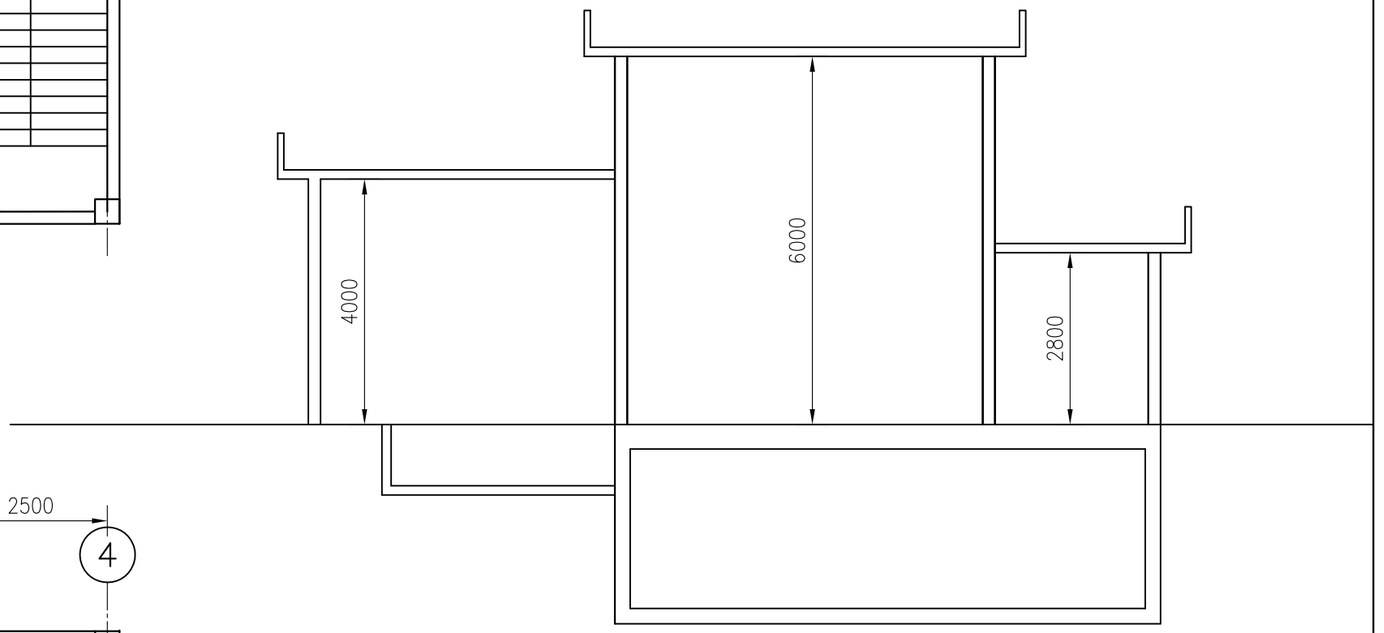

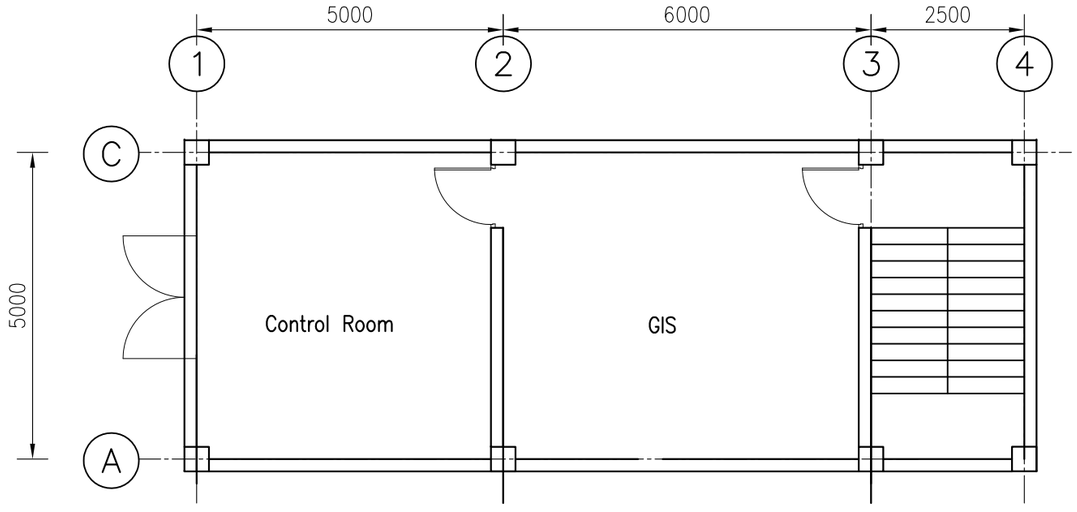

FORMAT A3 297x420=0,125m²

FILE NAME: CONTROL&GIS BUILDING

REV.	OPIS	DATUM	PROJEKTOVAO	KONTROLISAO	ODOBRIO	ODOBRIO

PROJEKTOVAO	D.Đ.	UGOVOR BROJ: 086-EN/15-R2	INV./OBJ.: CNIM/ BELGRADE EFW PLANT
OBRADIO	A.F.		
KONTROLISAO		DATUM: 06.2017.	
ODOBRIO		RAZMERA: 1:100	
ODOBRIO		REDNI BROJ:	

CNIM

ENERGOPROJEKT ENTEL a.d.

NAZIV:
CONTROL&GIS BUILDING
Ground floor plan, Section 1-1

CRTEŽ BROJ: **086-EN/15-G066**

LIST 01 OD 01 REV. 0

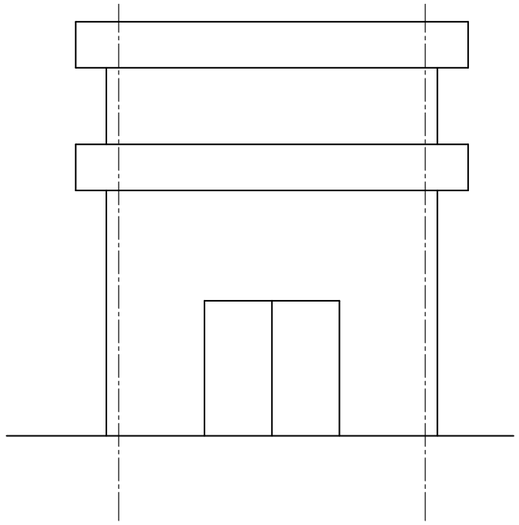

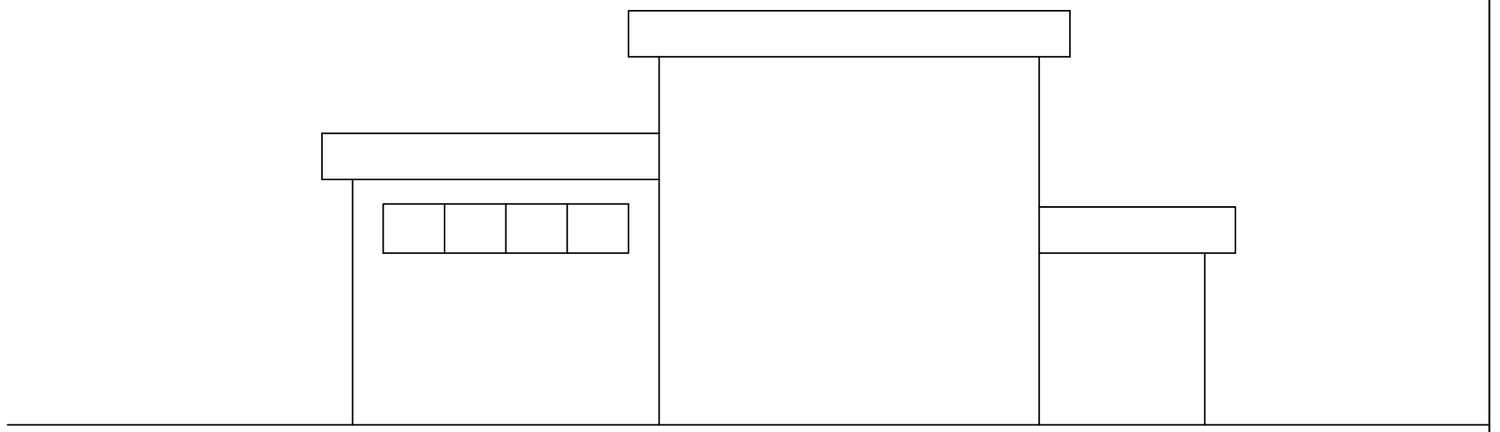

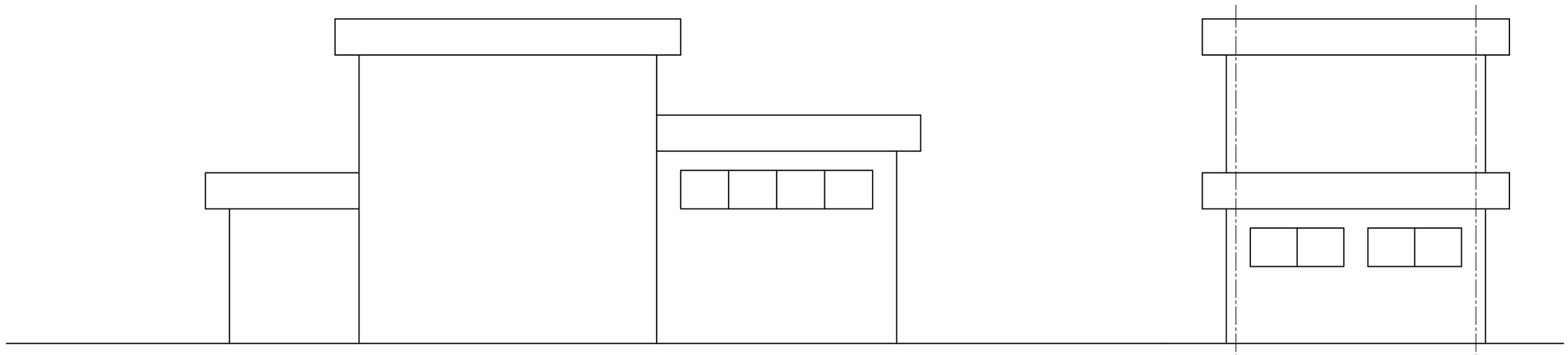

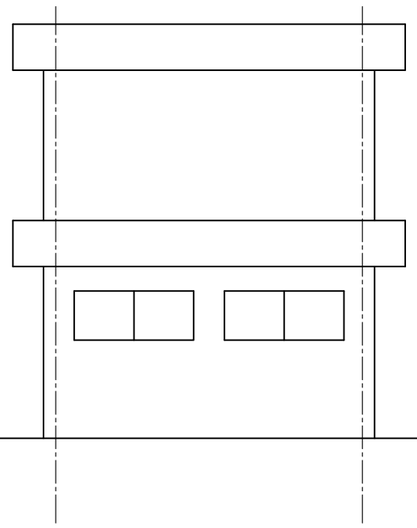

FORMAT A3 297x420=0,125m²

FILE NAME: CONTROL&GIS BUILDING

REV.	OPIS	DATUM	PROJEKTOVAO	KONTROLISAO	ODOBRIO	ODOBRIO

PROJEKTOVAO	D.Đ.	UGOVOR BROJ: 086-EN/15-R2	INV./OBJ.: CNIM/ BELGRADE EFW PLANT
OBRADIO	A.F.		
KONTROLISAO		DATUM: 06.2017.	
ODOBRIO		RAZMERA: 1:100	
ODOBRIO		REDNI BROJ:	

CNIM

ENERGOPROJEKT ENTEL a.d.

NAZIV:

CONTROL&GIS BUILDING
Elevation A, B, C and D

CRTEŽ BROJ: **086-EN/15-G067**

LIST 01 OD 01 REV. 0

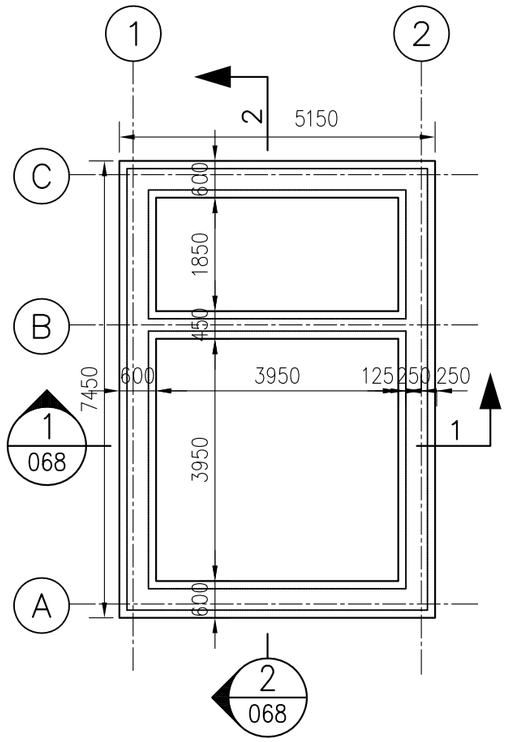

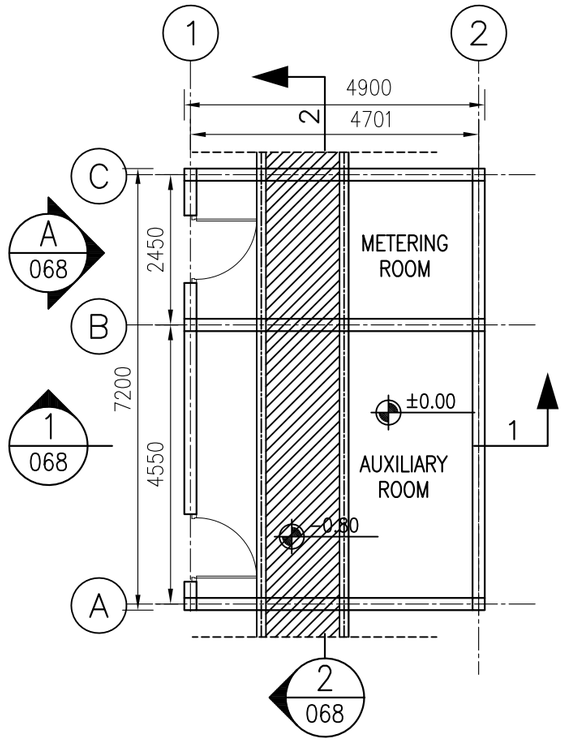

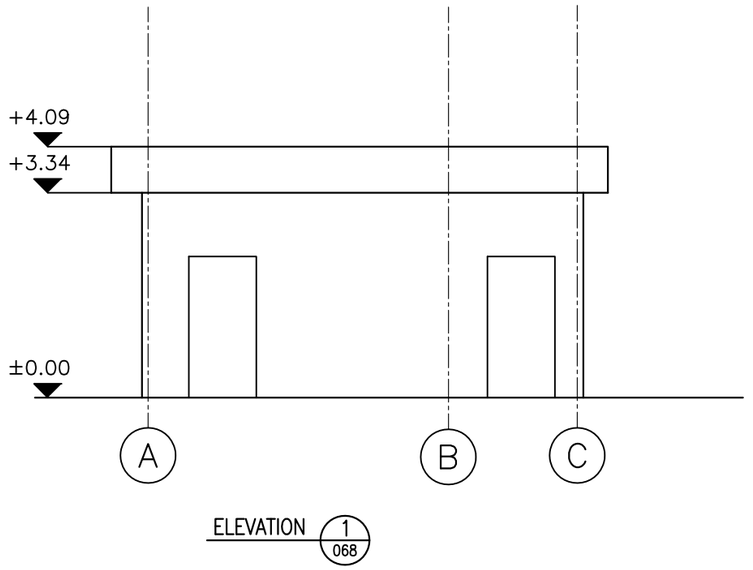

ELEVATION 1/068

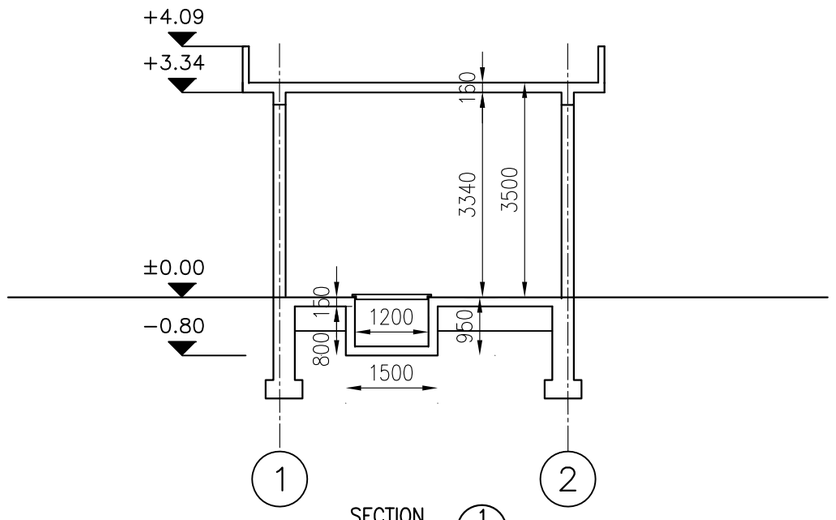

SECTION 1/068

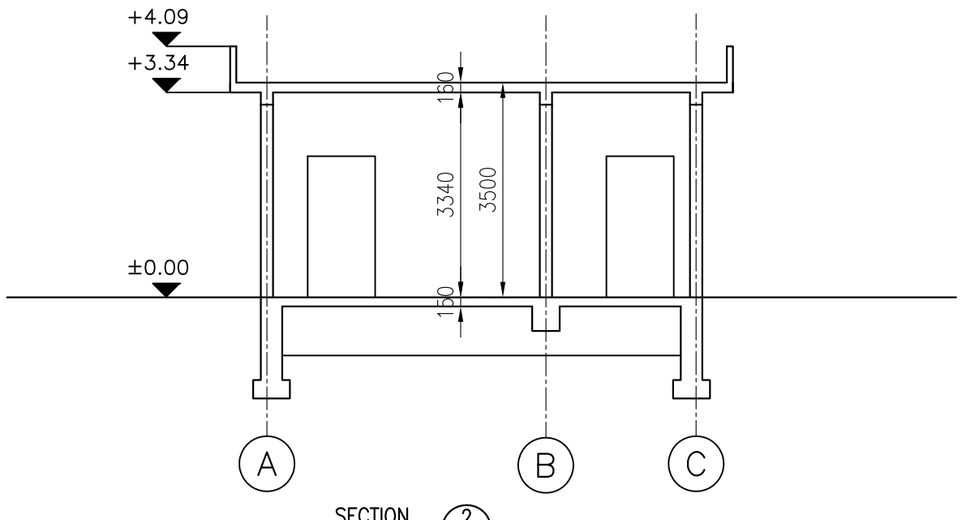

SECTION 2/068

CNIM

REV.	DESCRIPTION	DATE	DESIGNED BY	CHECKED BY	APPROVED BY	APPROVED BY	APPROVED BY

DESIGNED BY	D.Đ.
DRAWN BY	A.F.
CHECHED BY	
APPROVED BY	
N°:	

OFFER N°: 086-EN/15-R2

DATE: 06.2017.

SCALE: 1:100

EMP./PROJECT.:

CNIM/
BELGRADE EFW PLANT

ENERGOPROJEKT ENTEL a.d.

DWG.SUBJECT:

METERING&AUXILIARY ROOM
Foundation plan, Ground floor , Section 1-1 and 2-2, Elevation A

DWG N°: **086-EN/15-G068**

SHEET 01 OF 01 REV. 0

FILE NAME: METERING & AUXILIARY ROOM

FORMAT A3 297x420=0,125m²

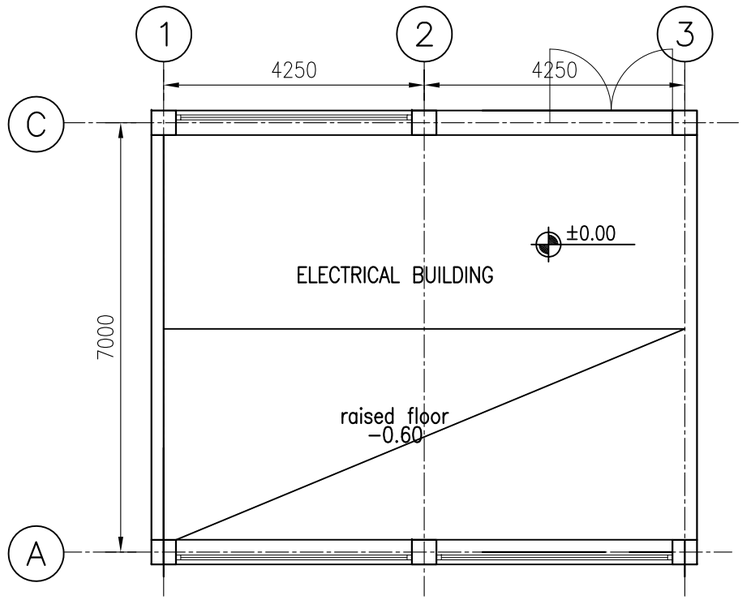

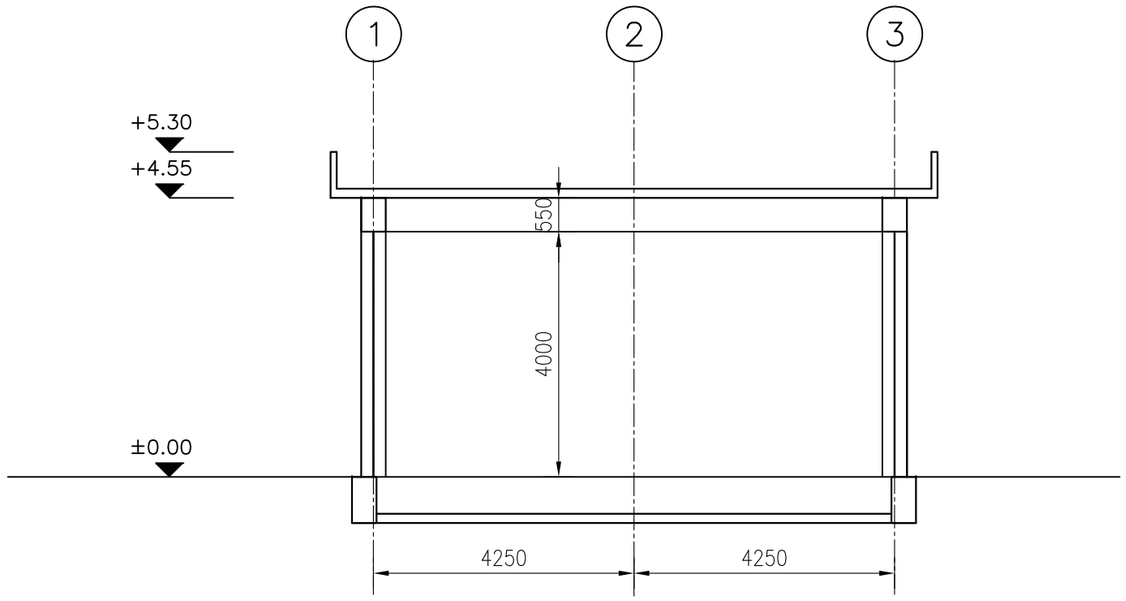

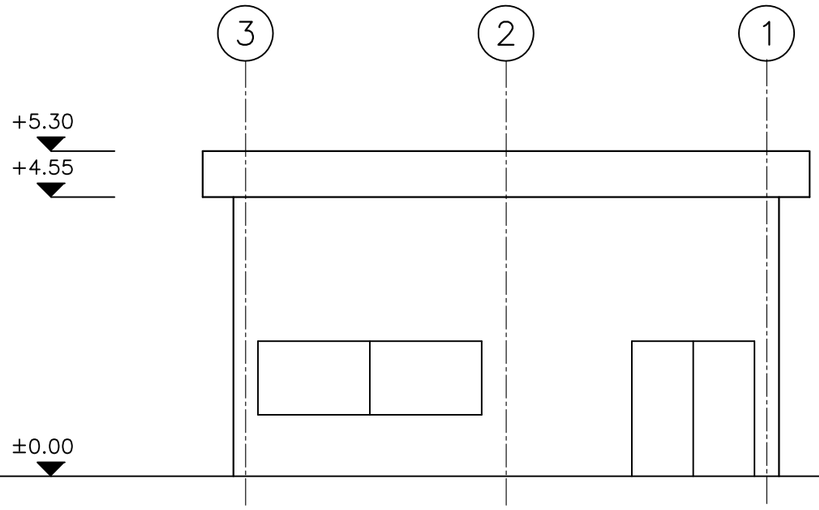

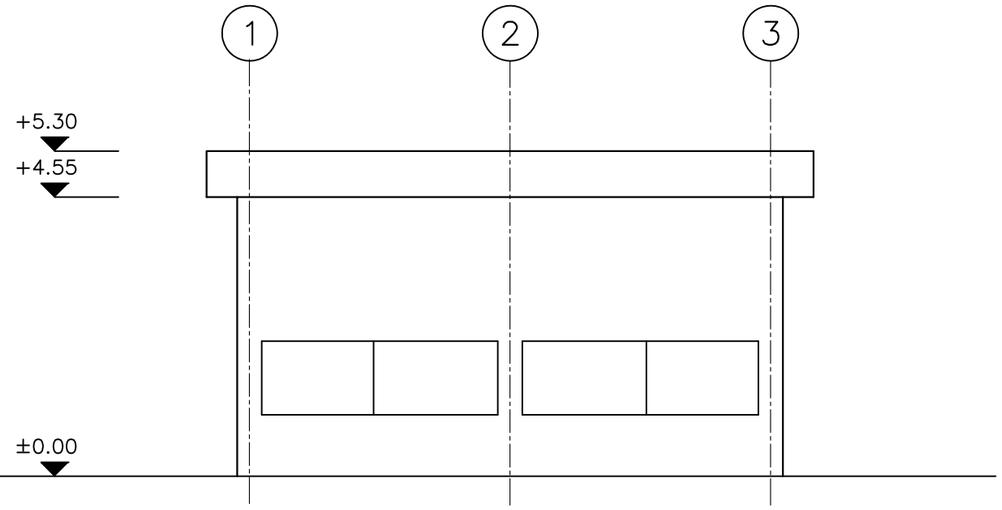

FORMAT A3 297x420=0,125m²

FILE NAME: ELEKTRO ZGRADA-RAZVODNO POSTR.

REV.	DESCRIPTION	DATE	DESIGNED BY	CHECKED BY	APPROVED BY	APPROVED BY

DESIGNED BY	D.Đ.
DRAWN BY	A.F.
CHECHED BY	
APPROVED BY	
APPROVED BY	

OFFER N°: 086-EN/15-R2

DATE: 06.2017.

SCALE: 1:100

N°:

EMP./PROJECT.:
CNIM/
BELGRADE EFW PLANT

ENERGOPROJEKT ENTEL a.d.

DWG.SUBJECT:
ELECTRICAL BUILDING
Ground floor , Section 1-1 , Elevation A and B

DWG N°: **086-EN/15-G069**

SHEET 01 OF 01 REV. 0

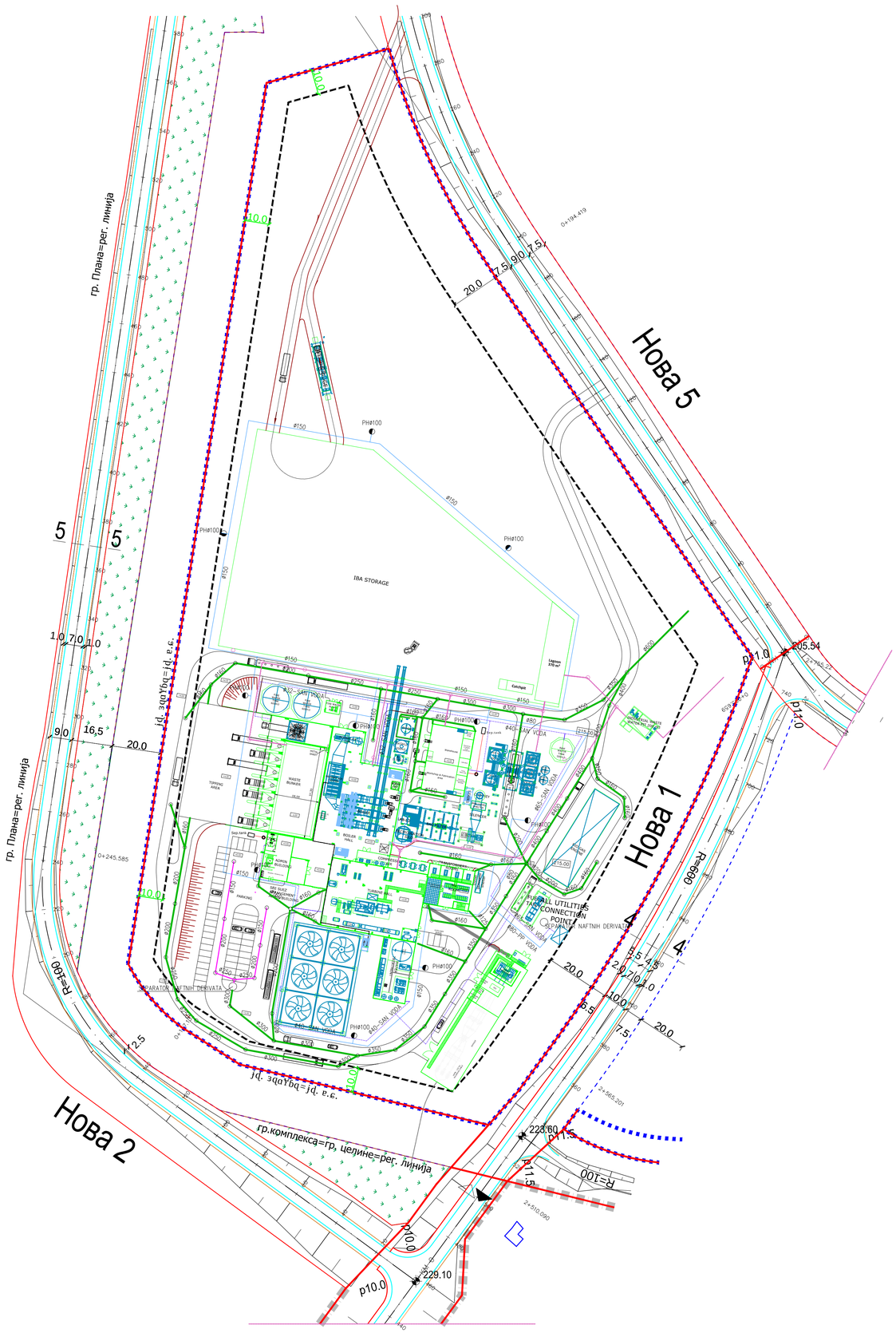

LEGENDA

- HIDRANTSKA MREZA–HYDRANT NETWORK
- SANITARNA VODA–SANITARY WATER
- ZAULJENA KANALIZACIJA–OILY SEWAGE
- ATMOSFERSKA KANALIZACIJA–STORM WATER SEWER
- FEKALNA KANALIZACIJA–SANITARY SEWAGE
- TEHNOLOSKA KANALIZACIJA–INDUSTIAL SEWAGE

REV.						

INVESTITOR: CNIM			OBJECT: BELGRADE EFW PLANT
DRAWN	A.T.	PROPOSAL: 068–EN/15–R2	PROJECT:
CHKD		PHASE:	SIST./OBJ.:
APPD			
APPD		DATE: 07.2017.	TITLE: SITE PLAN–WATER AND SEWAGE
SCALE: 1:2500			
CNIM			DWG. NUMBER: G070
			LIST 01 OD 01 REV. 0

FILE NAME: G13015–0001

FORMAT A1 594x841–0,5cm²

LEGEND:

	ROAD LIGHTING FIXTURE FOR DUAL ARC TUBE 100W NAVT LAMP, WITH NON-CORROSIVE, HIGH-PRESSURE DIE CAST ALUMINIUM HOUSING, HIGH-GRADE ANODIZED ALUMINIUM REFLECTOR, WEATHERPROOF, IP66, COMPLETE WITH 10M STEPPED TUBULAR, GALVANIZED STEEL LIGHTING POLE, FLANGE BOLTED ONTO CONCRETE FOUNDATION
	ROAD LIGHTING FIXTURE (DOUBLE - MOUNTED VIA "T" SUPPORT) FOR DUAL ARC TUBE 100W NAVT LAMP, WITH NON-CORROSIVE, HIGH-PRESSURE DIE CAST ALUMINIUM HOUSING, HIGH-GRADE ANODIZED ALUMINIUM REFLECTOR, WEATHERPROOF, IP66, COMPLETE WITH 10M STEPPED TUBULAR, GALVANIZED STEEL LIGHTING POLE, FLANGE BOLTED ONTO CONCRETE FOUNDATION
	FLOODLIGHT FOR DUAL ARC TUBE 150W NAVT LAMP (OR APPROPRIATE LED), WITH NON-CORROSIVE, HIGH-PRESSURE DIE CAST ALUMINIUM HOUSING, HIGH-GRADE ANODIZED ALUMINIUM WIDE DISTRIBUTION REFLECTOR, UNIVERSAL MOUNTING BRACKET FOR FIXING ON THE SUPPORTING STEEL CONSTRUCTION OR FACADE WALLS, WEATHERPROOF, IP65
DB-OLx	FEEDER PILLAR FOR OUTDOOR LIGHTING - LV DISTRIBUTION BOARD 3X400/230V, FREE STANDED, WEATHERPROOF, IP55
OLx.x	CIRCUIT NUMBER

0 10 20 30 40 80 100m

RAZMERA 1:1000

REV.			
INVESTITOR: CNIM		OBJECT: BELGRADE EFW PLANT	
DRAWN	S.N.	PROPOSAL: 068-EN/15-R2	PROJECT:
CHKD		PHASE:	SIST./OBJ.: OUTDOOR LIGHTING
APPD			
APPD		DATE: 07.2017.	TITLE: SITE PLAN
SCALE:	1:1000		
ENERGOPROJEKT ENTEL a.d.			DWG. NUMBER: E001
			LIST 01 OD 01 REV. 0